REVISIONS			
REV	DESCRIPTION	DATE	APPROVED

NOTES: UNLESS OTHERWISE SPECIFIED

1. SEE DRAWING NO. CB–00306 AND PROCEDURE P–1000 FOR ASSEMBLY AND TEST INSTRUCTION. PROCEDURES AND ASSEMBLY DRAWINGS ARE FOR INTERNAL USE ONLY.
2. ALL TESTING ARE IAW BATTERY COUNCIL INTERNATIONAL STANDARDS.
3. ALL DIMENSIONS ARE IN INCHES [MM].
4. ABBREVIATION USED IN TITLE IS: SEALED LEAD ACID (SLA).

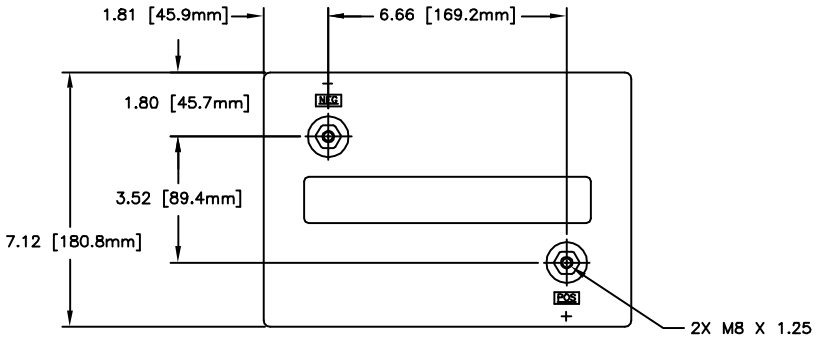

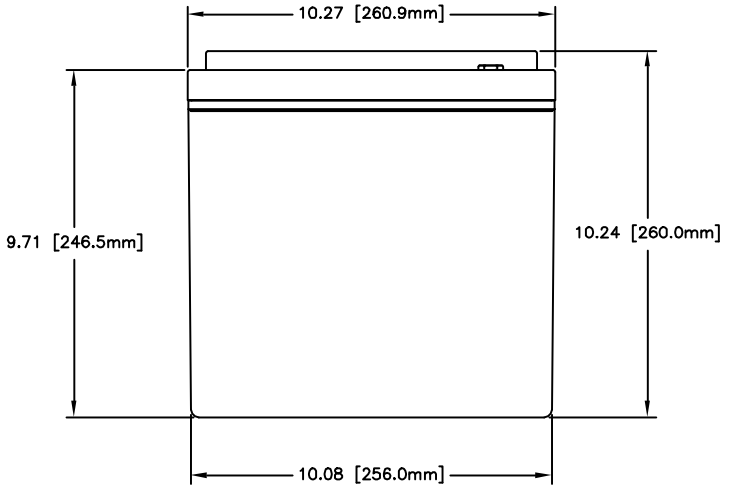

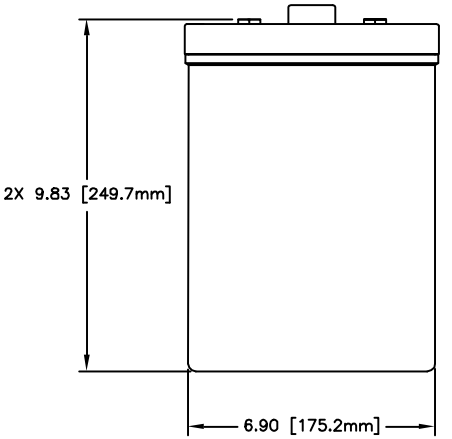

CAPACITY RATINGS	
PART NUMBER	PVX–2240
NOMINAL WEIGHT	67 LBS [30.4 KG]
AMPERE HOUR CAPACITY @ 24 HOUR 1.75 VOLTS/CELL @ 77°F (25° C)	224 AH

ENVELOPE DRAWING

QTY REQD	CAGE CODE	PART OR IDENTIFYING NO.	NOMENCLATURE OR DESCRIPTION	MATERIAL SPECIFICATION	ITEM NO.

PARTS LIST

UNLESS OTHERWISE SPECIFIED DIMENSIONS ARE IN INCHES TOLERANCES ARE:
FRACTIONS ±1/32 DECIMALS .XX ±.06 .XXX ±.030 ANGLES ±1°

TREATMENT NONE
FINISH NONE
SIMILAR TO NA | ACT WT NA | CALC WT NA

CONTRACT NO. NA

APPROVALS		DATE
DRAWN	ELH	8/13/01
CHECKED	HRF	8/21/01
APPROVED	JBT	8/23/01
ISSUED	AT	8/24/01

CONCORDE BATTERY CORPORATION
2009 SAN BERNARDINO RD, W. COVINA, CA 91790

TITLE BATTERY, SLA, 6 VOLT, PVX–2240

SIZE C | CAGE CODE 63017 | DWG NO. PVX–2240 | REV

SCALE NONE | SHEET 1 OF 1

ENGINEERING COPY 24AUG01