OutBack POWER™
member of The alpha Group™

EnergyCell
Front Terminal Battery
Owner's Manual

About OutBack Power Technologies

OutBack Power Technologies is a leader in advanced energy conversion technology. OutBack products include true sine wave inverter/chargers, maximum power point tracking charge controllers, and system communication components, as well as circuit breakers, batteries, accessories, and assembled systems.

Audience

This manual is intended for use by anyone required to install and operate this battery. Be sure to review this manual carefully to identify any potential safety risks before proceeding. The owner must be familiar with all the features and functions of this battery before proceeding. Failure to install or use this battery as instructed in this manual can result in damage to the battery that may not be covered under the limited warranty.

Contact Information

Address:	Corporate Headquarters 17825 – 59th Avenue N.E. Suite B Arlington, WA 98223 USA	European Office Hansastrasse 8 D-91126 Schwabach, Germany
Telephone:	+1.360.435.6030 +1.360.618.4363 (Technical Support) +1.360.435.6019 (Fax)	+49.9122.79889.0 +49.9122.79889.21 (Fax)
Email:	Support@outbackpower.com	
Website:	www.outbackpower.com	

Disclaimer

UNLESS SPECIFICALLY AGREED TO IN WRITING, OUTBACK POWER TECHNOLOGIES:

(a) MAKES NO WARRANTY AS TO THE ACCURACY, SUFFICIENCY OR SUITABILITY OF ANY TECHNICAL OR OTHER INFORMATION PROVIDED IN ITS MANUALS OR OTHER DOCUMENTATION.

(b) ASSUMES NO RESPONSIBILITY OR LIABILITY FOR LOSS OR DAMAGE, WHETHER DIRECT, INDIRECT, CONSEQUENTIAL OR INCIDENTAL, WHICH MIGHT ARISE OUT OF THE USE OF SUCH INFORMATION. THE USE OF ANY SUCH INFORMATION WILL BE ENTIRELY AT THE USER'S RISK.

Notice of Copyright

Trademarks

Date and Revision

August 2013, Revision B

Part Number

900-0127-01-00 Rev B

Table of Contents

Important Safety Instructions

READ AND SAVE THESE INSTRUCTIONS!

This manual contains important safety instructions for the EnergyCell battery. These instructions are in addition to the safety instructions published for use with all OutBack products. Read all instructions and cautionary markings on the EnergyCell battery and on any accessories or additional equipment included in the installation. Failure to follow these instructions could result in severe shock or possible electrocution. Use extreme caution at all times to prevent accidents.

WARNING: Personal Injury

- This equipment weighs in excess of 115 lbs (52 kg). Use safe lifting techniques when lifting this equipment as prescribed by the Occupational Safety and Health Association (OSHA) or other local codes. Lifting machinery may be recommended as necessary.
- Wear appropriate protective equipment when working with batteries, including eye or face protection, acid-resistant gloves, an apron, and other items.
- Wash hands after any contact with the lead terminals or battery electrolyte.

WARNING: Explosion, Electrocution, or Fire Hazard

- Ensure clearance requirements are strictly enforced around the batteries.
- Ensure the area around the batteries is well ventilated and clean of debris.
- Never smoke, or allow a spark or flame near, the batteries.
- Always use insulated tools. Avoid dropping tools onto batteries or other electrical parts.
- Keep plenty of fresh water and soap nearby in case battery acid contacts skin, clothing, or eyes.
- Wear complete eye and clothing protection when working with batteries. Avoid touching bare skin or eyes while working near batteries.
- If battery acid contacts skin or clothing, wash immediately with soap and water. If acid enters the eye, immediately flood it with running cold water for at least 20 minutes and get medical attention as soon as possible.
- Never charge a frozen battery.
- Insulate batteries as appropriate against freezing temperatures. A discharged battery will freeze more easily than a charged one.
- If a battery must be removed, always remove the grounded terminal from the battery first. Make sure all devices are de-energized or disconnected to avoid causing a spark.
- Do not perform any servicing other than that specified in the installation instructions unless qualified to do so and have been instructed to do so by OutBack Technical Support personnel.

Additional Resources

These references may be used when installing this equipment. Depending on the nature of the installation, it may be highly recommended to consult these resources.

Institute of Electrical and Electronics Engineers (IEEE) guidelines: IEEE 450, IEEE 484, IEEE 1184, IEEE 1187, IEEE 1188, IEEE 1189, IEEE 1491, IEEE 1578, IEEE 1635, and IEEE 1657 (various guidelines for design, installation, maintenance, monitoring, and safety of battery systems)

EnergyCell Batteries

Welcome to OutBack Power Systems

Thank you for purchasing the OutBack EnergyCell battery. The EnergyCell is a series of absorbed glass-mat (AGM) batteries with a valve-regulated lead-acid (VRLA) design. These products are designed to provide long, reliable service with minimal maintenance. Several versions of EnergyCell are available. All have high recharge efficiency and a compact footprint for higher energy density. All have a thermally welded case-to-cover bond to eliminate leakage, all are 100% recyclable, and all are UL-recognized components.

EnergyCell GH Battery

The EnergyCell GH uses pure lead plates. It is intended to receive continuous float charging under normal conditions when utility power is present.

- Intended for use with grid backup (float service) applications with occasional interruptions but minimal cycling
- Pure lead plates for long float service life in battery backup applications
- Extended shelf life

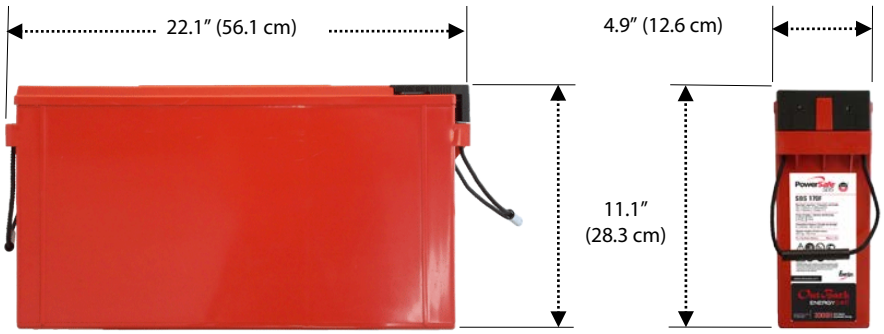

Figure 1 EnergyCell GH Battery

EnergyCell RE Battery

The EnergyCell RE uses pasted lead-calcium-tin plates. It is designed for regular discharge/charge cycles.

- Intended for use in backup, off-grid, and renewable energy (RE) sites with OutBack inverters, charge controllers, and other devices that require the use of deep-cycle batteries
- Lead-calcium-tin alloy plates for long life in both cycling and float applications
- High-density pasted plates for high cycle life

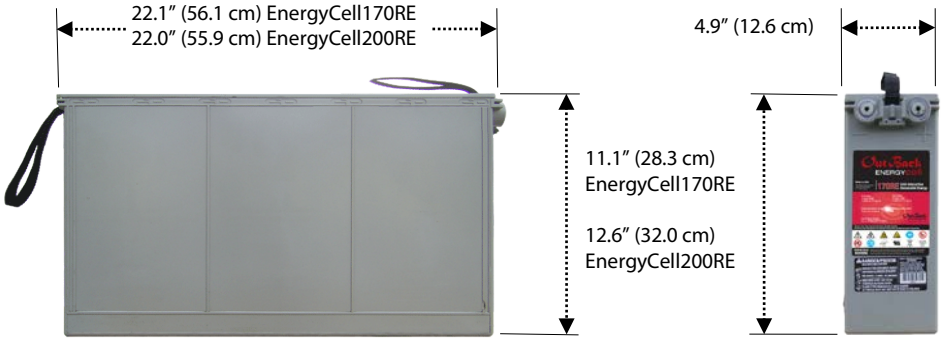

Figure 2 EnergyCell RE Battery

Materials Required

Tools (use insulated tools only)

- Torque wrenches
- Voltmeter

Accessories

- Interconnect bar
- Hardware
- Terminal cover

Storage and Environment Requirements

Temperatures

- EnergyCell batteries should not be operated in an environment where the average ambient temperature exceeds 85°F (27°C). The peak temperature of the operating environment should not exceed 110°F (43°C) for a period of more than 24 hours. High operating temperatures will shorten a battery's life (see page 7).
- Batteries should never be allowed to freeze, as this will damage them and could result in leakage.
- Batteries should not be subjected to temperature variations of more than 5°F (3°C). This will lead to unbalanced voltages between multiple batteries (or between cells in one battery, if it is subjected to a temperature differential).
- Batteries should be stored in a cool, dry location. They should be placed in service as soon as possible after receiving them. The recommended temperature for storage is 77°F (25°C). However, a range of 60°F (16°C) to 80°F (27°C) is acceptable.

Self-Discharge and Freshening

The EnergyCell battery comes fully charged, but will discharge itself over time, even in storage. Higher storage temperatures increase the rate of self-discharge. The EnergyCell GH has a longer shelf life than other VRLA batteries, including the EnergyCell RE. At room temperature (77°F or 25°C), the EnergyCell GH has a shelf life of 18 months before self-discharging to unacceptable levels. Figure 3 shows the rate of EnergyCell GH self-discharge at various temperatures.

When fully charged, the EnergyCell's natural or "rest" voltage is approximately 12.8 Vdc. It should be given a "freshening" charge (see pages 11 and 12) if its rest voltage drops below 12.5 Vdc per battery (2.08 Vdc per cell). A battery should not be used if its rest voltage is 12.0 volts or lower upon delivery. Contact the vendor upon receiving a battery in this state.

No EnergyCell battery should **ever** be permitted to self-discharge below 70% of its capacity. This is highly detrimental and will shorten battery life. (This is not the same as discharging to 70% under load. See page 7.)

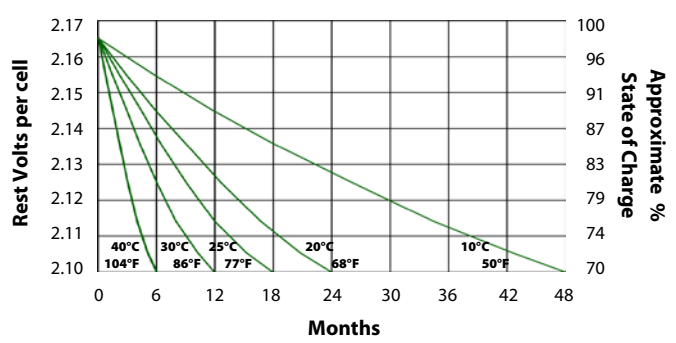

Figure 3 EnergyCell GH Shelf Life

Storing EnergyCell GH Batteries

The EnergyCell GH must be kept in storage no longer than the shelf life indicated in Figure 3 for a particular temperature. At the end of this time it must be given a freshening charge. (That is, a battery stored at 40°C should be stored no longer than six months, while it can be stored up to 48 months at 10°C without a charge.) Stored batteries should be checked for open-circuit voltage at intervals. Any time the battery voltage is less than 2.10 volts per cell (12.6 volts per battery), it should be given a freshening charge regardless of the storage time.

At 40°C, the EnergyCell GH voltage should be checked every 2 months. At 30°C, the interval is 3 months. At 25° to 20° the interval is 4 months. At temperatures lower than 15°C, the voltage only needs to be checked every 6 months.

Storing EnergyCell RE Batteries

The EnergyCell RE must be given a freshening charge every six months when stored at 77°F (25°C). The charge should be every three months if stored at temperatures of up to 92°F (33°C). If stored in higher temperatures, the charge should be every month.

Capacity

Battery capacity is given in ampere-hours (amp-hours). This is a current draw which is multiplied by the duration of current flow. A draw of *X* amperes for *Y* hours equals an accumulation of *XY* amp-hours.

Because the battery's chemical reaction constantly releases energy, it tends to replenish its own charge to a minor degree. Smaller loads will deplete the batteries less than larger loads because of this constant replenishment. This means that effectively the battery has more capacity under lighter loads.

For example, if the EnergyCell 170RE is discharged at the 48-hour rate (a load expected to drain 100% of its capacity in 48 hours), it will be measured to have 163.9 amp-hours. However, at the 4-hour rate, a heavier load, only 120.6 amp-hours will be measured. For discharge rates and amp-hours of all EnergyCell batteries, see Table 3 on page 17.

The EnergyCell models are named after their capacity at the 100-hour rate.

State of Charge

The battery state of charge (SOC) can be determined by two methods. One is to measure its voltage. This is accurate only if the batteries are left at rest (no charging or loads) for 24 hours at room temperature (77°F or 25°C). **If these conditions are not met, then voltage checks may not yield usable results.** If they are met, then on average, a battery at 12.8 Vdc will be at 100% SOC. 12.2 Vdc represents roughly 50% SOC.

The more accurate method is to use a battery monitor such as the OutBack FLEXnet DC. Using a sensor known as a shunt, the monitor observes the current through the battery. It keeps a total of amp-hours lost or gained by the battery and can give accurate SOC readings.

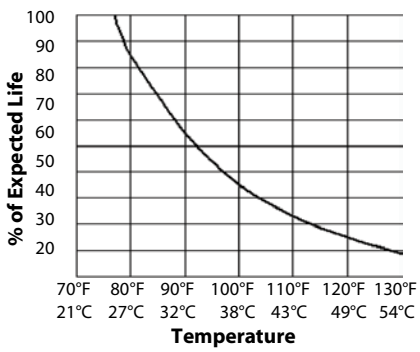

Figure 4 Battery Life

For optimal battery life, it is recommended not to discharge below 70% SOC (30% depth of discharge) on a regular basis. The battery should **never** be discharged below 50% of its capacity, as this will significantly shorten its life. If operated in the recommended range, the EnergyCell will typically have a life of hundreds of cycles. With consistently lighter discharge, the battery may have thousands of cycles. (This can be affected by temperature. Figure 4 shows the effect of ambient temperature on battery life.)

System Layout

CAUTION: Fire Hazard
Failure to ventilate the battery compartment can result in the buildup of hydrogen gas, which is explosive.

- The battery enclosure or room must be well-ventilated. This will protect against the accidental buildup of hydrogen gas. All EnergyCell batteries are sealed and do not normally emit noticeable amounts of gas. However, in the event of accidental leakage, the enclosure must not allow gas to become concentrated.
- The battery enclosure or room must have adequate lighting. This is necessarity to read terminal polarity, identify cable color, and view the physical state of the battery as required.
- The battery should be installed with a minimum 36" (91.4 cm) clearance in front. This allows access for testing, maintenance, or any other reasons.
- If multiple batteries are installed, they should have a minimum of ½" (12.7 mm) clearance on either side.

Battery Configurations

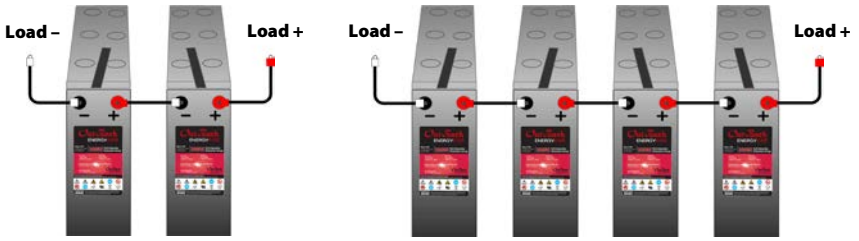

Series string (24 Vdc) **Series string (48 Vdc)**

Batteries are placed in series (negative to positive) for additive voltages. Batteries in series are known as a "string". A string of two EnergyCell batteries has a nominal voltage of 24 Vdc and can be used for 24-volt loads. A string of four has a nominal voltage of 48 Vdc. Other voltages are possible. However, batteries in series do not have additive amp-hours. A single string of any voltage (as shown above) has the same amp-hours as a single battery.

When replacing batteries, a new battery should not be placed in series with old batteries. This will cause severe stress and shorten the life of all batteries. All batteries in a string should be replaced at the same time.

Figure 5 Series String Configurations

Batteries are placed in parallel (positive to positive, negative to negative) for additive amp-hour capacity. Three batteries in parallel have three times the amp-hours of a single battery. However, batteries in parallel do not have additive voltages. A single set of batteries in parallel (as shown below) have the same voltage as a single battery.

It is not recommended to place more than three batteries or three strings in parallel. Imbalances between batteries will reduce the efficiency and shorten the life of all batteries.

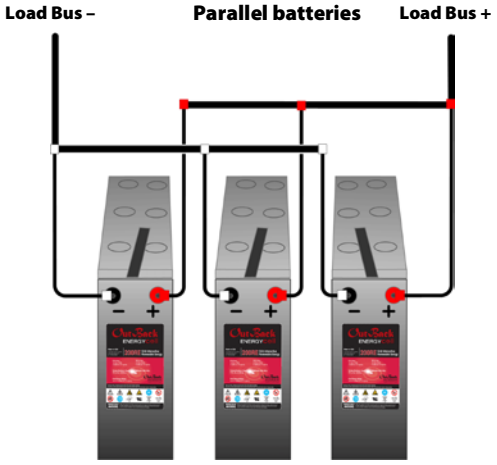

Figure 6 Parallel String Configuration

Batteries are placed in both series and parallel for both additive voltage and amp-hour capacity. Series strings placed in parallel have the same nominal voltage as each string. They have the same amp-hour capacity of each string added together. Two parallel strings of two EnergyCell batteries in series have a nominal voltage of 24 Vdc, twice the nominal voltage. They also have double the amp-hour capacity of a single battery. Two parallel strings of four batteries in series have a nominal voltage of 48 Vdc at double the amp-hour capacity of a single battery.

In a series-parallel bank, it is not recommended to connect the load to the positive and negative terminals of a single string. Due to cable resistance, this will tend to put more wear on that string. Instead, it is recommended to use "reverse-return" or "cross-corner" wiring, where the positive cable is connected to the first string and the negative is connected to the last. This will allow current to flow evenly among all strings.

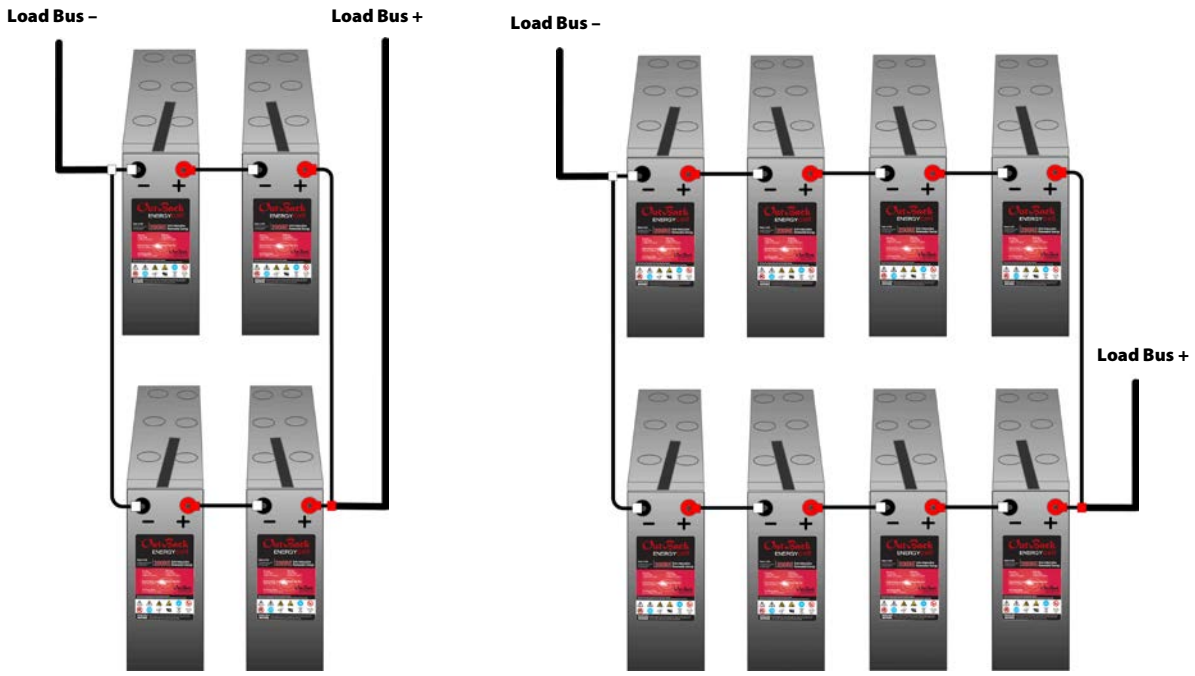

Figure 7 Series/Parallel String Configurations

DC Wiring

⚠	**CAUTION: Equipment Damage** Never reverse the polarity of the battery cables. Always ensure correct polarity.
⚠	**CAUTION: Fire Hazard** Always install a circuit breaker or overcurrent device on the DC positive conductor for each device connected to the batteries.
⚠	**CAUTION: Fire Hazard** Never install extra washers or hardware between the mounting surface and the battery cable lug or interconnect. The decreased surface area can build up heat.

NOTE: To avoid corrosion, use plated lugs on cable terminations. When multiple cables are terminated, use plated terminal bus bars.

Install cable lug (or interconnect) and all other hardware in the order illustrated. The lug or interconnect should be the first item installed. It should make solid contact with the mounting surface. Do not install hardware in a different order than shown.

EnergyCell GH Terminals

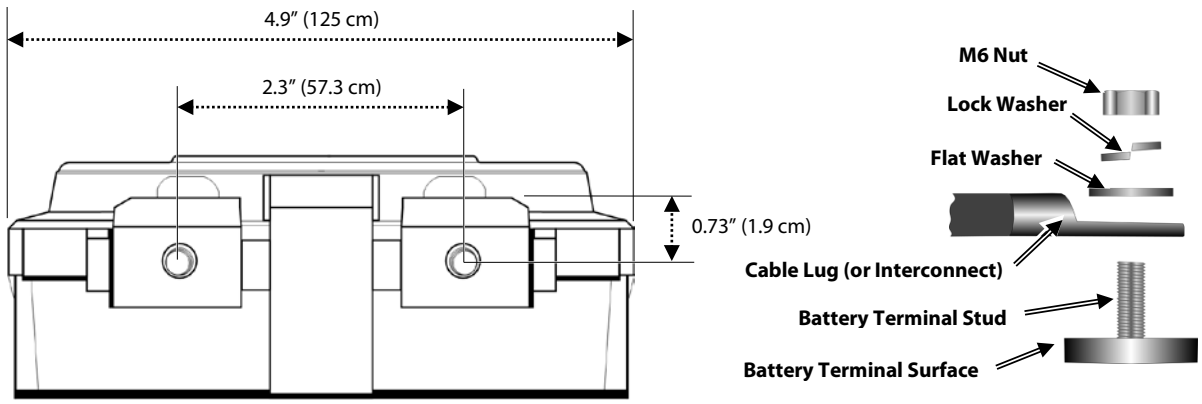

Figure 8 EnergyCell GH Terminals

EnergyCell RE Terminals

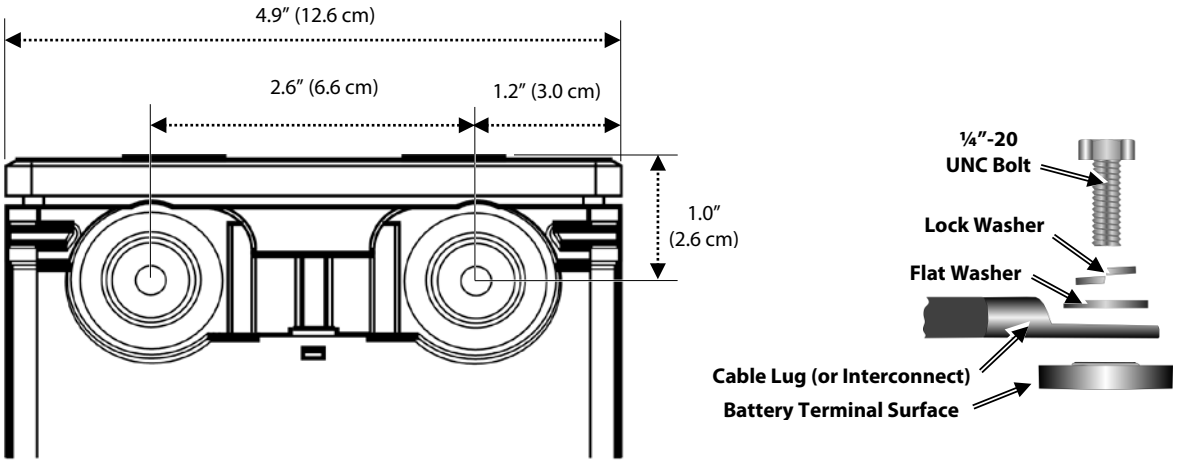

Figure 9 EnergyCell RE Terminals

To make the DC connections:

1. If installing batteries in the OutBack Integrated Battery Rack (IBR) or a similar cabinet, always begin with the lowest shelf for stability. Four EnergyCell batteries can be placed on one shelf. Place all batteries with terminals facing to the front. Remove and save the terminal protectors.
2. Clean and lightly brush all terminals and contact surfaces.

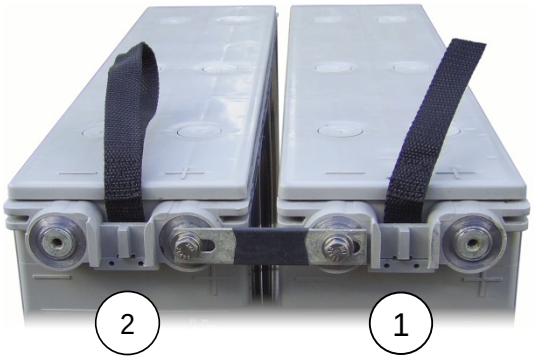

3. In normal configurations, the battery on the far right will be the positive (+) output for that string. This battery should be designated (1). Proceeding to the left, adjacent batteries in that string should be designated (2), (3), and so on.
4. If more than one string is present, designate the first string as A, the second as B, and so on. This should be done regardless of whether the strings are on the same shelf or higher shelves. Number the batteries in subsequent strings just as was done in step 3.
5. Install series connections using the interconnect and hardware that was supplied with each battery. The interconnect should connect from the negative (left) side of battery 1 to the positive (right) side of battery 2 as shown above. Tighten interconnect hardware "hand tight" only.
6. Repeat the process as appropriate for batteries 2, 3, and any others in the string. Connect the proper number of batteries in series for the nominal voltage of the load.
7. If multiple series strings will be used, repeat this process for strings B, C, and so on.
8. Install parallel connections. Parallel connections are made from the positive terminal of one battery or string to the positive of the next; negative connections are made similarly. (See Figure 6.) External cables or bus bars must be provided. The interconnect included with the battery cannot make parallel connections.
9. Use a digital voltmeter (DVM) to confirm the nominal system voltage and polarity. Confirm that no batteries or strings are installed in reverse polarity.
10. Install cables or bus bars for DC loads. Size all conductors as appropriate for the total loads. See the manual for the Integrated Battery Rack (IBR) if necessary.
11. Before making the final battery connection, ensure the main DC disconnect is turned off. If this is not possible, then do not make the final connection within the battery enclosure. Instead, make it at the load or elsewhere in the cable system so that any resulting spark does not occur in the battery enclosure.
12. Once hardware is installed and batteries are properly aligned, torque all connections to 110 in-lb (12.4 Nm). Lightly coat the surfaces with battery terminal grease and reinstall the terminal covers.
13. Make the final DC connections. Commission the batteries with a full recharge.

Figure 10 Connecting Batteries

Charging (EnergyCell GH)

EnergyCell GH batteries are usually charged using a constant-voltage or float charger. OutBack inverter/chargers and charge controllers do not have this function as their default setting. They can be made to perform a constant float charge by setting the absorption voltage equal to the float voltage. Other adjustments may be necessary.

Float Charge

A float charger gradually charges the batteries by maintaining them at a fixed voltage. In backup applications, it is common for this voltage to be maintained continuously by the charger until the batteries are needed. However, if the charger is not in regular operation, the batteries should be given an occasional freshening

charge for a minimum of 24 hours. After discharge, the float charge should be applied as soon as possible. It must not be delayed more than 7 days in any case.

The charger should be sized so that the full charge rate is at least 17 Adc per battery string.

The float charger should be set to maintain the batteries at 13.62 Vdc per battery in a string (2.27 volts per cell) at 77°F (25°C). Other temperatures require voltage compensation within a range of 2.21 to 2.29 volts per cell. See Temperature Compensation on page 13.

Freshening Charge

A maintenance or "freshening" charge is given to batteries that have been in storage or newly received. The freshening charge must be appropriate to the battery model as noted below. All charging should be temperature-compensated (see page 13).

The charge should proceed as described on page 11 using a float charger. The voltage should be 13.62 Vdc per battery in a string (2.27 volts per cell).

Charging (EnergyCell RE)

EnergyCell RE batteries are usually charged using a "three-stage" charging cycle: bulk stage, absorption stage, and float stage. Most OutBack chargers follow this algorithm. However, not all chargers are designed or programmed the same way. The settings should be checked and changed to match the recommendations below if necessary. Contact OutBack Technical Support before using other charger types.

Bulk Stage

The bulk stage is a constant-current stage. The charger's current is maintained at a constant high level. The battery voltage will rise as long as the current continues to flow. Each battery model has a recommended maximum current limit (see Table 2 on page 16) which should not be exceeded. At excessive current rates, the battery's efficiency of conversion becomes less and it may not become completely charged. The battery may permanently lose capacity over the long term.

The purpose of the bulk stage is to raise the battery to a high voltage (usually referred to as either bulk voltage or absorption voltage). The acceptable voltage range is 14.4 to 14.8 Vdc per battery in a string (2.40 to 2.47 volts per cell). If batteries are in series, this number is multiplied by the number of batteries in the string. This stage typically restores the battery to 85% to 90% of capacity, if the charge rate does not exceed the maximum shown on page 17.

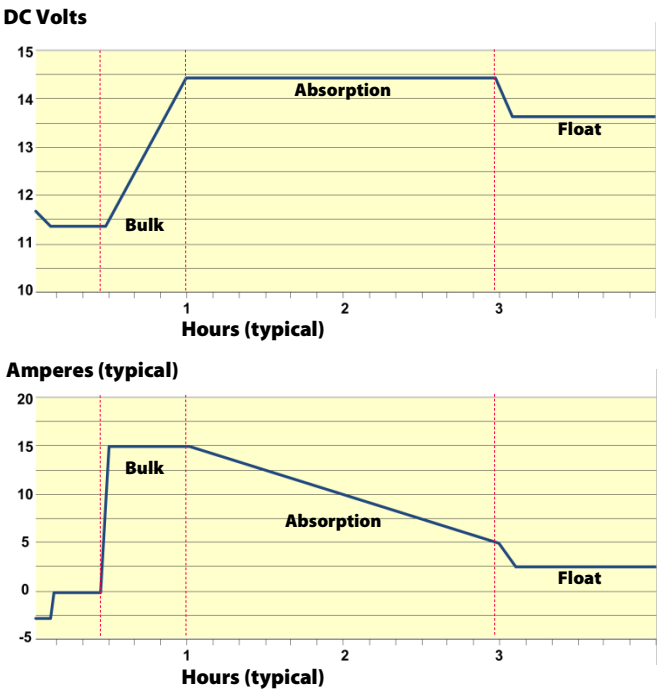

Figure 11 Three-Stage Charging

Absorption Stage

The absorption stage is a constant-voltage stage. It is established upon reaching the desired voltage in the bulk stage. This causes the charger to begin limiting the current flow to only what is necessary to maintain this voltage. A large amount of current is required to raise the voltage to the absorption level, but less current is required to maintain it there. This requirement will tend to decrease as long as the absorption level is maintained, resulting in a tapering current flow. The amount of absorption current will vary with conditions, but will typically decrease to a very low number. This "tops off the tank", leaving the battery at 100% of capacity.

The battery is considered to be completely full when the following conditions are met: The charge current must taper down to a level of current equal to between 1% and 2% of the total battery amp-hours — while still maintaining the absorption voltage. At this point the charger is allowed to exit absorption to the next stage.

Not all chargers measure their absorption stage in amperes. Many chargers maintain absorption for a timed period (often two hours), under the assumption that the current will taper to the desired level during this time. However, if the charger exits absorption and ends the charge before the current has tapered down to the desired level, the battery may not be 100% charged. Repeated failure to perform a complete charge will result in decreased battery life. If possible, it is recommended to use a DC ammeter to observe and time the current as it tapers to the proper amperage. The user can then manually set the charger's absorption timer accordingly.

Float Stage

The float stage is a maintenance stage which ensures the battery remains fully charged. Left with no maintenance, the battery will tend to slowly lose its charge. The float stage provides current to counter this self-discharge. As with the absorption stage, float is a constant-voltage stage which supplies only enough current to maintain the designated voltage.

The voltage requirements for float stage are much lower than for bulk and absorption. The float stage should provide enough current to maintain the battery at 13.6 to 13.8 Vdc per battery in a string (2.27 to 2.30 volts per cell). If batteries are in series, this number should be multiplied by the number of batteries in the string.

Freshening Charge

A maintenance or "freshening" charge is given to batteries that have been in storage or newly received. The freshening charge must be appropriate to the battery model as noted below. All charging should be temperature-compensated (see page 13).

With a three-stage charger, the charge should proceed as described on page 12. The absorption voltage should be 14.4 to 14.8 Vdc per battery in a string (2.40 to 2.47 volts per cell). If a specialized VRLA charger is available, it should charge EnergyCell RE batteries at 14.4 to 14.8 Vdc continuously for 16 hours.

Notes on EnergyCell RE Charging

The current requirements for the absorption and float stages are usually minimal; however, this will vary with conditions, with battery age, and with battery bank size. (Larger banks tend to have higher exit current values for the absorption stage, but they also have higher float current.) Any loads operated by the battery while charging will also impact the requirements for the charger, as the charger must sustain everything.

Not all chargers exit directly to the float stage. Many will enter a quiescent or "silent" period during which the charger is inactive. These chargers will turn on and off to provide periodic maintenance at the float level, rather than continuous maintenance.

Constant-Float Charging

"Constant-float" charging may be used with the EnergyCell RE in backup power applications where the battery is rarely discharged. When a discharge occurs, it is critical to recharge the battery as soon as possible afterward. When charged with a constant-float charger, the charger should be set to maintain the battery at 13.65 Vdc per battery in a string (2.30 volts per cell) at room temperature. The battery is considered to be fully charged when the cell voltage is maintained at this level and the charge current has dropped to a low level over a long period of time. In constant-float charging, it is critical to compensate the settings for temperature.

The EnergyCell RE is not optimized for constant-float. OutBack recommends using the EnergyCell GH instead.

Temperature Compensation

Battery performance will change when the temperature varies above or below room temperature (77°F or 25°C). Temperature compensation adjusts battery charging to correct for these changes.

When a battery is cooler, its internal resistance goes up and the voltage changes more quickly. This makes it easier for the charger to reach its voltage set points. However, while accomplishing this process, it will not deliver all the current that the battery requires. As a result, the battery will tend to be undercharged. (See

Improper Use on page 14.) Conversely, when a battery is warmer, its internal resistance goes down and the voltage changes more slowly. This makes it harder for the charger to reach its voltage set points. It will continue to deliver energy over time until the charging set points are reached. However, this tends to be far more than the battery requires, meaning it will tend to be overcharged. (See Improper Use.)

To compensate for these changes, a charger used with the EnergyCell battery must have its voltages raised by a specified amount for every degree below room temperature. They must be similarly lowered for every degree above room temperature. This factor is multiplied if additional batteries are in series. Failure to compensate for significant temperature changes will result in undercharging or overcharging which will shorten battery life.

EnergyCell GH Required Compensation

The factor is 4 mV per cell (0.024 Vdc or24 mV per battery) per degree C above or below room temperature (77°F or 25°C).

EnergyCell RE Required Compensation

The factor is 5 mV per cell (0.03 Vdc or 30 mV per battery) per degree C above or below room temperature (77°F or 25°C).

RTS

OutBack inverter/chargers and charge controllers are equipped with the Remote Temperature Sensor (RTS) which attaches to the battery and automatically adjusts the charger settings. When the RTS is used, it should be placed on the battery sidewall, as close to the center of the battery (or to the center of the bank) as possible.

The charger determines the RTS compensation factor. Most OutBack chargers are preset to a compensation of 5 mV per cell. If an RTS is not present, if a different charger is in use, or if a different compensation factor is required, it may be necessary to adjust the charger settings manually. The RTS should be checked periodically. Failure to compensate correctly may result in wrong voltages. (See Improper Use.)

Improper Use

⚠	**CAUTION: Equipment Damage** Read all items below. Maintenance should be performed as noted on page16. Failure to follow these instructions can result in battery damage which is not covered under the EnergyCell warranty.
⚠	**CAUTION: Equipment Damage** Do not perform equalization on any EnergyCell battery. Equalization is a controlled overcharge used for battery maintenance. As it uses high DC voltages, it could result in battery damage which is not covered under the EnergyCell warranty.

For any EnergyCell battery, if the charger settings are too high, this will cause premature aging of the battery, including loss of electrolyte due to gassing. The result will be permanent loss of some battery capacity and decreased battery life. This is also true for battery charging that is not compensated for high temperatures.

"Thermal runaway" can result from high ambient temperatures, charging at higher voltages over extended time, incorrect temperature compensation, or shorted cells. When the buildup of internal heat exceeds the rate of cooling, the battery's chemical reaction accelerates. The reaction releases even more heat, which in turn continues to speed up the reaction. Thermal runaway causes severe heat, gassing, lost electrolyte, and cell damage. It usually requires battery replacement. The process can be halted by turning off the charger. However, if cell damage has occurred, shorted cells may continue to generate heat and gas for some time.

If an EnergyCell battery is not charged completely (or if the settings are too low), its total capacity will not be available during the next discharge cycle. This capacity will become progressively less and less over subsequent cycles. Long-term undercharging will result in decreased battery life. This is also true for battery charging that is not compensated for low temperatures.

Troubleshooting and Maintenance

Table 1 Troubleshooting

Category	Symptom	Possible Cause	Remedy
Performance	Reduced operating time	Normal life cycle	Replace battery bank when (or before) capacity drops to unacceptable levels.
		Defective cells	Test and replace battery as necessary.
	Excessive voltage drop upon applying load	Excessively cold battery	Carefully warm up the battery.
		Undersized cabling	Increase cable ampacity to match loads.
		Loose or dirty cable connections	Check and clean all connections. Physical damage on terminals may require the battery to be replaced. Replace hardware as necessary.
		Undersized battery bank	Add additional batteries to match loads.
		Defective cells	Test and replace battery as necessary.
External Inspection	Swollen or deformed battery casing; "rotten-egg" or sulfurous odor; battery is hot	Thermal runaway **NOTE**: A modest amount of swelling (or concavity) on the battery case is normal.	**NOTE:** Thermal runaway is a hazardous condition. Treat the battery with caution. Allow the battery to cool before approaching. Disconnect and replace battery as necessary. Address the conditions that may have led to thermal runaway (see page 14).
	Damaged battery casing	Physical abuse	Replace battery as necessary.
	Heat damage or melted grease at terminals	Loose or dirty cable connections	Check and clean all connections. Physical damage on terminals may require the battery to be replaced. Replace hardware as necessary.
Voltage testing	Fully-charged battery displays low voltage	High temperature	Carefully cool the battery. An overheated battery may contribute to thermal runaway.
	Fully-charged battery displays high voltage	Low temperature	Carefully warm up the battery.
	Individual battery charging voltage will not exceed 13.3 Vdc; high float current; failure to support load	Shorted cell	Test and replace battery as necessary. A shorted cell may contribute to thermal runaway.
	Individual battery float voltage exceeds 14.5 Vdc; failure to support load	Open cell	Test and replace battery as necessary.

Table 1 Troubleshooting

Category	Symptom	Possible Cause	Remedy
Current testing	Charging current to series string is zero; failure to support load	Open connection or open battery cell in string	Check and clean all connections. If battery appears to have an open cell, test and replace as needed. Replace hardware as necessary.
	Charging current to series string remains high over time	Batteries require additional time to charge	Normal behavior; no action necessary.
	Charging current to series string remains high with no corresponding rise in voltage	Shorted cell	Test and replace battery as necessary. A shorted cell may contribute to thermal runaway.

Periodic Evaluation

Upon replacement of a battery (or string), all interconnect hardware should be replaced at the same time.

To keep track of battery performance and identify batteries that may be approaching the end of their life, it is recommended to perform the following tests upon initial installation, and then on a quarterly basis afterward. The battery must be fully charged. Tests must be made with a high-quality digital meter. Voltages must be measured directly on battery terminals, not on other conductors. All connections must be cleaned, re-tightened, and re-torqued before testing. If a battery fails any test, it may be defective. If this occurs under the conditions of the warranty, the battery will be replaced according to the terms of the warranty.

24-Hour Open-Circuit Test

Ensure that the battery is brought to a full state of charge. Remove all connections from the battery. Allow the battery to rest in this state for 24 hours and test its voltage. A fully-charged EnergyCell RE battery should measure 12.84 Vdc (temperature-compensated). A fully-charged EnergyCell GH battery should measure 12.95 Vdc. A battery below 12.6 Vdc has lost capacity and may need to be replaced.

25-Amp Capacity Test

Install a DC load which draws a constant 25 Adc. The load may be used on either a single battery or a full string. With this load, discharge the batteries until they reach 10.5 Vdc per battery (1.75 Vdc per cell) and monitor the elapsed time. At the same time, monitor the battery temperature and record the temperature at the end of the test. The elapsed time should be adjusted for temperature by the following formula:

$\mathbf{M_c = M_r(1 - 0.009\,[T - 26.7])}$ where $\mathbf{M_r}$ = actual elapsed minutes, $\mathbf{T}$ = temperature at end of run time, and $\mathbf{M_c}$ = minutes corrected for temperature with a baseline of 80°F (26.7°C).

For the EnergyCell 170RE, $\mathbf{M_c}$ should be 300 minutes.

For the EnergyCell 200RE, $\mathbf{M_c}$ should be 347 minutes.

For the EnergyCell 200GH, $\mathbf{M_c}$ should be 348 minutes.

If the result is less than 70% of this number, the battery (or string) may need to be replaced.

Specifications

Table 2 EnergyCell Front Terminal Battery Specifications

	EnergyCell 170RE	EnergyCell 200RE	EnergyCell 200GH
Battery Category	Valve-regulated, lead-acid (VRLA)		
Battery Technology	Absorbed glass-mat (AGM)		
Cells Per Unit	6		
Voltage Per Unit (nominal)	12 Vdc		
Operating Temperature Range (with temperature compensation)	Discharge: -40°F (-40°C) to 160°F (71°C) Charge: -10°F (-23°C) to 140°F (60°C)		-40°F (-40°C) to 122°F (50°C)
Optimal Operating Temperature Range	74°F (23°C) to 80°F (27°C)		50°F (10°C) to 104°F (40°C)
Recommended Maximum Charging Current Limit Per String	25 Adc	30 Adc	102 Adc
Float Charging Voltage	13.62 to 13.8 Vdc at 77°F (25°C)		13.62 Vdc at 77°F (25°C)
Absorb Charging Voltage	14.4 to 14.8 Vdc at 77°F (25°C)		N/A
Self Discharge	Store up to 6 months at 77°F (25°C) before a freshening charge is required.		Store up to 18 months at 77°F (25°C) before a freshening charge is required.
Temperature Compensation Factor (charging)	0.03 Vdc per battery in series (5 mV per cell) per degree C		0.024 Vdc per battery in series (4 mV per cell) per degree C
Terminal	Threaded insert terminal to accept ¼"-20 UNC bolt		Threaded stud to accept M6 nut
Terminal Hardware Initial Torque	110 in-lb (12.4 Nm)		80 in-lb (9.0 Nm)
Weight	115.0 lb (52.2 kg)	131.0 lb (59.4 kg)	115.7 lb (52.5 kg)
Dimensions (H x D x W)	11.1 x 22.1 x 4.9" (28.3 x 56.1 x 12.5 cm)	12.6 x 22.0 x 4.9" (32.0 x 55.9 x 12.5 cm)	11.1 x 22.1 x 4.9" (28.3 x 56.1 x 12.5 cm

Ampere-Hour Capacity Based On Discharge Rate

Table 3 Amp-Hour Capacity @ 77°F (25°C)

Discharge in Hours	EnergyCell 170RE Amp-Hours	EnergyCell 200RE Amp-Hours	EnergyCell 200GH Amp-Hours
1	89.1	103.0	120.0
3	114.2	132.0	148.5
4	120.6	139.6	154.8
5	125.9	145.5	159.0
8	137.0	158.4	168.8
12	145.3	168.0	176.4
20	153.8	178.0	191.0
24	157.0	181.4	189.6
48	163.9	189.6	192.0
100	170.0	200.0	200.0

The EnergyCell battery capacity is measured in amp-hours. The battery capacity is not a fixed number, but will vary with conditions. (See page 7.) The figures in this table are used to measure the capacity of the EnergyCell battery based on load size.

Table 3 is described more fully on the next page.

Specifications

Battery capacity is judged by the number of amp-hours measured when a battery is discharged to a standard voltage under load. This is known in the industry as “terminal voltage”. (Standard terminal voltage is 10.5 volts per 12-volt battery, or 1.75 volts per cell.)

The amp-hours measured upon reaching terminal voltage also depend on the size of the load. A load capable of discharging the battery in one hour is far larger than a load which takes 3, 4, or 5 hours. (8-hour loads, 12-hour loads, etc. are progressively smaller in size.) As described on page 7, the battery has less capacity under larger loads and more capacity under smaller loads. Under a 1-hour load, the EnergyCell 170RE has only 89.1 amp-hours. Under a much lighter 100-hour load, the same battery has 170 amp-hours, almost twice that amount. The EnergyCell 200RE and EnergyCell 200GH are measured similarly.

This page intentionally left blank.

Corporate Headquarters
17825 – 59th Avenue N.E.
Suite B
Arlington, WA 98223 USA
+1.360.435.6030

European Office
Hansastrasse 8
D-91126
Schwabach, Germany
+49.9122.79889.0

900-0127-01-00 Rev B