CanadianSolar

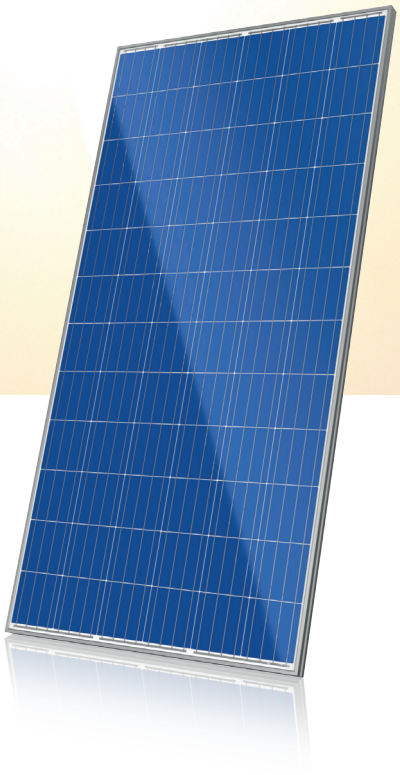

MAX POWER CS6X-310|315|320P

High quality and reliability in all Canadian Solar modules is ensured by 14 years' experience in module manufacturing, well-engineered module design, stringent BOM quality testing, an automated manufacturing process and 100% EL testing.

KEY FEATURES

- Excellent module efficiency up to 16.68%
- Outstanding low irradiance performance > 96.0%
- +5Wp — Positive power tolerance up to 5 W
- No. 1 PTC — High PTC rating up to 91.97%
- IP67 — IP67 junction box for long-term weather endurance
- Heavy snow load up to 5400 Pa wind load up to 2400 Pa
- Salt mist, ammonia and blowing sand resistance, apply to seaside, farm and desert environments

25 years — **insurance-backed warranty**
non-cancellable, immediate warranty insurance
linear power output warranty

10 years — **product warranty on materials and workmanship**

MANAGEMENT SYSTEM CERTIFICATES*

ISO 9001: 2008 / Quality management system
ISO/TS 16949: 2009 / The automotive industry quality management system
ISO 14001: 2004 / Standards for environmental management system
OHSAS 18001: 2007 / International standards for occupational health & safety

PRODUCT CERTIFICATES*

IEC 61215 / IEC 61730: VDE / MCS / CE / SII / CEC AU / CQC / INMETRO
UL 1703 / IEC 61215 performance: CEC listed (US)
UL 1703: CSA / IEC 61701 ED2: VDE / IEC 62716: VDE / IEC 60068-2-68: SGS
PV CYCLE (EU) / UNI 9177 Reaction to Fire: Class 1

* As there are different certification requirements in different markets, please contact your local Canadian Solar sales representative for the specific certificates applicable to the products in the region in which the products are to be used.

CANADIAN SOLAR INC. is committed to providing high quality solar products, solar system solutions and services to customers around the world. As a leading manufacturer of solar modules and PV project developer with about 10 GW of premium quality modules deployed around the world since 2001, Canadian Solar Inc. (NAS–DAQ: CSIQ) is one of the most bankable solar companies worldwide.

CANADIAN SOLAR INC.
545 Speedvale Avenue West, Guelph, Ontario N1K 1E6, Canada, www.canadiansolar.com, support@canadiansolar.com

MODULE / ENGINEERING DRAWING (mm)

Rear View

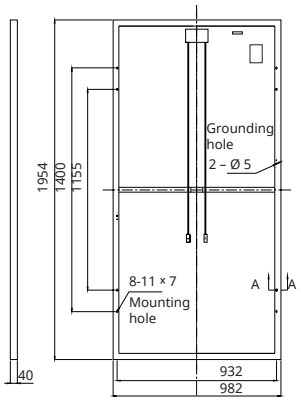

Frame Cross Section A-A

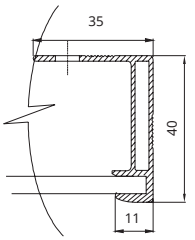

Mounting Hole

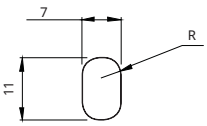

CS6X-310P / I-V CURVES

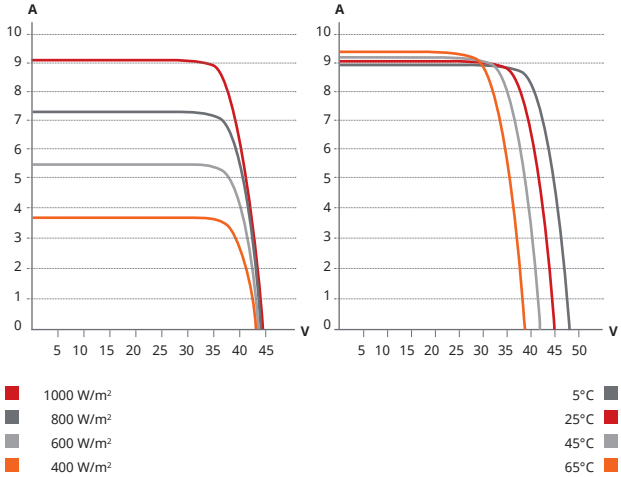

ELECTRICAL DATA / STC*

Electrical Data CS6X	310P	315P	320P
Nominal Max. Power (Pmax)	310 W	315 W	320 W
Opt. Operating Voltage (Vmp)	36.4 V	36.6 V	36.8 V
Opt. Operating Current (Imp)	8.52 A	8.61 A	8.69 A
Open Circuit Voltage (Voc)	44.9 V	45.1 V	45.3 V
Short Circuit Current (Isc)	9.08 A	9.18 A	9.26 A
Module Efficiency	16.16%	16.42 %	16.68 %
Operating Temperature	-40°C ~ +85°C		
Max. System Voltage	1000 V (IEC) or 1000 V (UL)		
Module Fire Performance	TYPE 1 (UL 1703) or CLASS C (IEC 61730)		
Max. Series Fuse Rating	15 A		
Application Classification	Class A		
Power Tolerance	0 ~ + 5 W		

* Under Standard Test Conditions (STC) of irradiance of 1000 W/m², spectrum AM 1.5 and cell temperature of 25°C.

MODULE / MECHANICAL DATA

Specification	Data
Cell Type	Poly-crystalline, 6 inch
Cell Arrangement	72 (6 × 12)
Dimensions	1954×982×40 mm (76.93×38.7×1.57 in)
Weight	22 kg (48.5 lbs)
Front Cover	3.2 mm tempered glass
Frame Material	Anodized aluminium alloy
J-BOX	IP67, 3 diodes
Cable	4 mm² (IEC) or 4 mm² & 12 AWG 1000V (UL), 1150 mm (45.3 in)
Connectors	MC4 or MC4 comparable
Stand. Packaging	26 pcs, 620 kg (quantity & weight per pallet)
Module Pieces per Container	624 pcs (40' HQ)

ELECTRICAL DATA / NOCT*

Electrical Data CS6X	310P	315P	320P
Nominal Max. Power (Pmax)	225 W	228 W	232 W
Opt. Operating Voltage (Vmp)	33.2 V	33.4 V	33.6 V
Opt. Operating Current (Imp)	6.77 A	6.84 A	6.91 A
Open Circuit Voltage (Voc)	41.3 V	41.5 V	41.6 V
Short Circuit Current (Isc)	7.36 A	7.44 A	7.50 A

* Under Nominal Operating Cell Temperature (NOCT), irradiance of 800 W/m², spectrum AM 1.5, ambient temperature 20°C, wind speed 1 m/s.

TEMPERATURE CHARACTERISTICS

Specification	Data
Temperature Coefficient (Pmax)	-0.43 % / °C
Temperature Coefficient (Voc)	-0.34 % / °C
Temperature Coefficient (Isc)	0.065 % / °C
Nominal Operating Cell Temperature	45±2°C

PERFORMANCE AT LOW IRRADIANCE

Industry leading performance at low irradiation, +96.0 % module efficiency from an irradiance of 1000 W/m² to 200 W/m² (AM 1.5, 25°C).

PARTNER SECTION

The specification and key features described in this Datasheet may deviate slightly and are not guaranteed. Due to on-going innovation, research and product enhancement, Canadian Solar Inc. reserves the right to make any adjustment to the information described herein at any time without notice. Please always obtain the most recent version of the datasheet which shall be duly incorporated into the binding contract made by the parties governing all transactions related to the purchase and sale of the products described herein.

Caution: For professional use only. The installation and handling of PV modules requires professional skills and should only be performed by qualified professionals. Please read the safety and installation instructions before using the modules.

CANADIAN SOLAR INC. July 2015. All rights reserved, PV Module Product Datasheet I V5.2_EN