SW Conext E-Panel
Instruction Manual

SW Conext E-Panel
shown with optional equipment.

Features

- Inverter battery breaker
- 500 amp / 50mv shunt included for battery monitoring systems
- Heavy duty 175 amp AC power distribution bus bars included
- Spaces for Dinrail and panel mount circuit breakers
- Can be stacked for dual systems

MidNite Solar
17722 - 67th Ave NE
Arlington, Wa 98223
www.midnitesolar.com

IMPORTANT SAFETY INSTRUCTIONS

SAVE THESE INSTRUCTIONS - These instructions contain important safety and operating instructions for MidNite Solar E-Panels.

If you do not fully understand any of the concepts, terminology, or hazards outlined in these instructions, please refer installation to a qualified dealer, electrician or installer. These instructions are not meant to be a complete explanation of a renewable energy system.

GENERAL PRECAUTIONS
WORKING WITH OR IN THE VICINITY OF A LEAD ACID BATTERY, SEALED OR VENTED IS DANGEROUS. VENTED BATTERIES GENERATE EXPLOSIVE GASES DURING NORMAL OPERATION. FOR THIS REASON, IT IS VERY IMPORTANT THAT BEFORE SERVICING EQUIPMENT IN THE VICINITY OF LEAD-ACID BATTERIES YOU REVIEW AND FOLLOW THESE INSTRUCTIONS CAREFULLY.

If service or repair should become necessary, contact MidNite Solar Inc. Improper servicing may result in a risk of shock, fire or explosion. To reduce these risks, disconnect all wiring before attempting any maintenance or cleaning. Turning off the inverter will not reduce these risks. Solar modules produce power when exposed to light. When it is not possible to disconnect the power coming from the Photovoltaics by an external means such as a combiner, cover the modules with an opaque material before servicing any connected equipment.

Do not work alone. Someone should be in the range of your voice or close enough to come to your aid when you work with or near electrical equipment.

Remove rings, bracelets, necklaces, watches etc. when working with batteries, photovoltaic modules or other electrical equipment. Power from an illuminated photovoltaic array makes a very effective arc welder with dire consequences if one of the welded pieces is on your person.

To reduce the risk of injury, connect only deep cycle lead acid type rechargeable batteries. Other types of batteries may leak or burst, causing personal injury or damage.

This equipment is NOT intended for use with life support equipment or other medical equipment or devices.

Be sure to comply with all local and national code requirements including National Electrical Code, ANSI/NFPA 70. Use Class 1 wiring methods for field wiring connections to terminals of a Class 2 circuit. Use only 14-1/0 gauge AWM wire. Select the wire gauge used based on the protection provided by the circuit breakers/fuses.
It is the responsibility of the installer to verify compliance with all applicable codes.

Before making any connections verify that the circuit breakers are in the off position including the inverter breaker. Double check all wiring before applying power.

INSTRUCTIONS DE SÉCURITÉ IMPORTANTES

CONSERVER CES INSTRUCTIONS Ces instructions contiennent des informations importantes pour utiliser le Midnite Solar MNECSW-250 E-Panel en toute sécurité.

1. Avant l'utilisez cet appareil lis et comprends toutes les instructions et avertissements.

2. Si vous ne comprenez pas l'une des concepts ou des instructions contenu dans cette manuel consulter un agent spécialisé.

3. Si des réparations sont nécessaires contactez MidNite Solar pour plus des informations. Danger de choc électrique et de risque de brulure. Rien à dépanner à l'intérieure du cette appareil. Ne pas ouvrir le couver. Pour toute réparation ou service d'entretien, consulter un agent spécialisé. Il y'a peut-être plusieurs sources d'alimentation dans cette system. Débrancher toutes les interrupteurs avant toute d'entretien où nettoyage.

4. Ne travaillez pas seul. Quelqu'un devrait toujours être à proximité pour aider en cas d'une situation d'urgence.

5. Retirer bagues, bracelets, colliers, montres, et quelles choses comme ça. Il y'a risque des blessures graves s'il y'a un court-circuit. Cela pourrait ruiner votre journée entière.

6. Le câblage doit être fait en conformité avec le National Electrical Code ANSI / NFPA 70. Utiliser des méthodes de câblage de catégorie 1 pour les connexions de câblage sur .des terminaux d'un circuit de classe 2. Utilisez uniquement des fils de AWM de calibre 14-1/0. Sélectionnez le type de câble utilisé sur la base de la protection prévue par les disjoncteurs / fusibles.

Table of Contents

Features....1
Warnings....2
Model Number Descriptions....5
Optional Accessories....6
Component Locator....9
Component Locator Continued....10
E-Panel Dimensions....11
E-Panel Knockout Size and Location....12
Backplate Dimensions....13
Removing the E-Panel Cover....14
Installing the XW-SCP....15
Installation Considerations....16
Installation....17
DC Wiring....20
AC Wiring....22
Slider Kit Installation....29
Pre-Wired and Dual systems....30
Appendix A Tightening torque....31
Appendix B Breaker Torque Values....31
Appendix C Wire size by breaker Size....32
Warranty Information....33

Symbols used in this manual

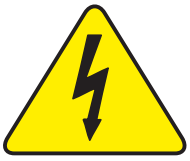

High Voltage Present. Risk of injury or death.

Haute Tension. Danger de mort ou blessures graves

Hazardous condition present

Mise En Garde. Situation dangereuse présente.

Ground symbol indicates earth ground

Indique la connexion à terre

Model Number Descriptions

E-Panel Kits:
Includes E-Panel, 175 or 250 Amp DC disconnect breaker, 500 Amp shunt, Busbars for AC and DC connections, Heavy Duty tin plated copper busbars for easy DC connection to the inverter, Multi-position busbars for easy connection of AC in and out as well as PV. E-Panel kits are not pre-wired.

MNE175SW	E-Panel with 175 Amp DC Disconnect breaker.
MNE250SW	E-Panel with 250 Amp DC Disconnect breaker.
MNESW-BP	Wall mounting backplate for E-Panel and Inverter

Pre-Wired Systems:
Includes everything in E-Panel kits above factory pre-wired with inverter and all breakers ready to mount out of the box. Some models include a Classic Charge controller. Dual systems have 2 complete E-Panels and a 6" connecting conduit.

Off Grid:

MNSW2524-CL150	Prewired off grid system with an SW2524 Inverter and Classic 150 charge controller
MNSW2524D-2CL150	Dual Prewired off grid system with two SW2524 Inverter and two Classic 150 charge controllers
MNSW2524-CL200	Prewired off grid system with an SW2524 Inverter and Classic 200 charge controller
MNSW2524D-2CL200	Dual Prewired off grid system with two SW2524 Inverters and two Classic 200 charge controllers
MNSW2524-CL250	Prewired off grid system with an SW2524 Inverter and Classic 250 charge controller
MNSW2524D-2CL250	Dual Prewired off grid system with an two SW2524 Inverters and two Classic 250 charge controllers
MNSW4024-CL150	Prewired off grid system with an SW4024 Inverter and Classic 150 charge controller
MNSW4024D-2CL150	Dual Prewired off grid system with two SW4024 Inverters and two Classic 150 charge controllers
MNSW4024-CL200	Prewired off grid system with an SW4024 Inverter and Classic 200 charge controller
MNSW4024D-2CL200	Dual Prewired off grid system with two SW4024 Inverters and two Classic 200 charge controllers
MNSW4024-CL250	Prewired off grid system with an SW4024 Inverter and Classic 250 charge controller
MNSW4024D-2CL250	Dual Prewired off grid system with two SW4024 Inverters and two Classic 250 charge controllers

AC Bypass Kit:

MNESW-ACBP	AC Bypass kit Includes Slider, two 50 amp two pole MNEAC-2P breakers, an MNEAC30 30 amp two pole breaker and all required hardware

Model Number Decoding

E-Panel Kits

MNE	**175**	**SW**
MidNite E-Panel	Disconnect Breaker	Compatible Inverter

Pre-Wired Systems

MN	**SW2524**	**D**	**2CL150**
MidNite E-Panel	System Inverter	Dual System	Classics in system

Optional accessories

The SW Conext E-Panel has mounting for up to two MidNite Solar Classic MPPT Charge Controllers.

Available in 150, 200 and 250 volt versions, The Classic Charge Controller maximizes yield from your solar / hydro or wind source.
The Classic provides over a years worth of graphs and data which is also accessible from your PC or over an internet connection.
Built in arc fault detection and DC GFP. Plus many other features.

Also available is the **MNCCCK** - One inch close nipple, three one inch lock nuts and two insulating bushings. For connecting charge controllers to MidNite E-Panels or other similar enclosures.

Optional accessories

MNSPD - MidNite Solar
Surge Protective Device

The MidNite Solar Surge Protective Device (MNSPD) is a Type 2 device, designed for indoor and outdoor applications. Engineered for both AC and DC electrical systems, it protects both transformer and transformer-less inverters without interfering with the GFP protection circuit, it provides protection to service panels, load centers or where the SPD is directly connected to the electronic device requiring protection.

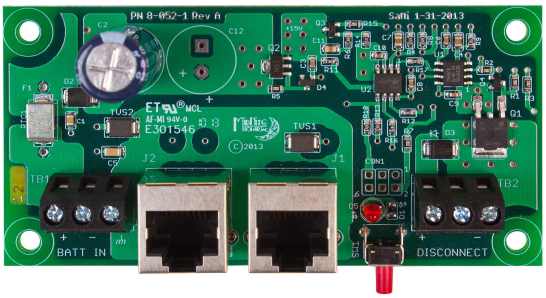

MNBDM - MidNite Solar
Battery Disconnect Module

The Battery Disconnect Module is designed to work in conjunction with the Bird House and the Disconnecting Combiners to provide complete Emergency System shut down with the single push of a button. The system uses standard CAT5 cable between devices, we do offer a 600 volt Listed CAT5 cable. You can have multiple Combiners, Bird Houses and Battery disconnect modules on a single system. The Battery disconnect module works with 24 and 48 volt battery systems and will interface with any of our Shunt trip circuit breakers.

Optional accessories Continued

The Whiz Bang Jr. is designed to work with the Classic Charge Controller to give even greater resolution on power measurements. SImple one wire hook-up.

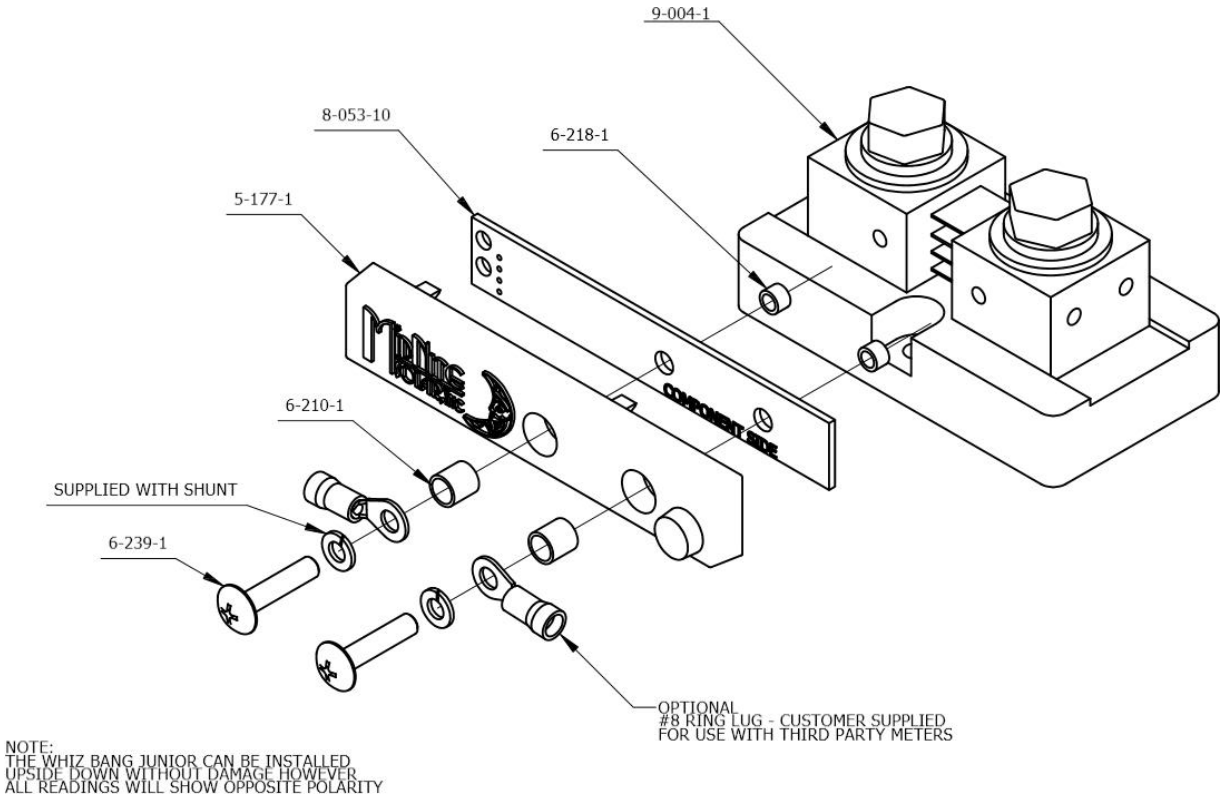

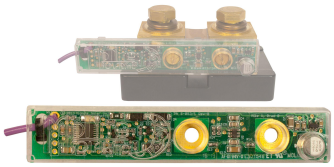

The Whiz Bang Jr can provide shunt access for co-operative products.

Other optional parts include circuit breakers, battery cables, the Battery Capacity meter and more. Visit www.midnitesolar.com or your dealer for more information.

Component Locator

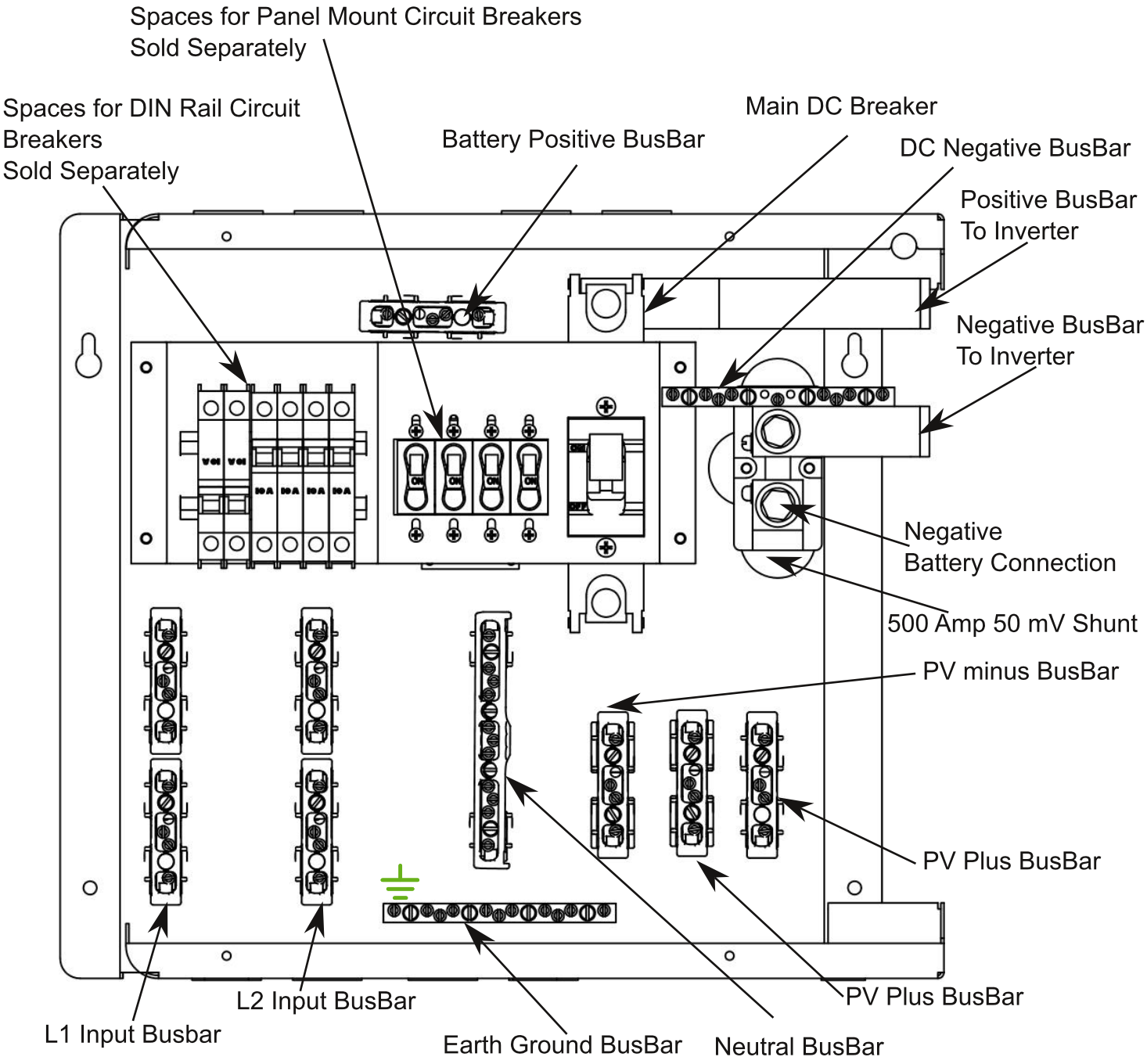

Component Locator Continued

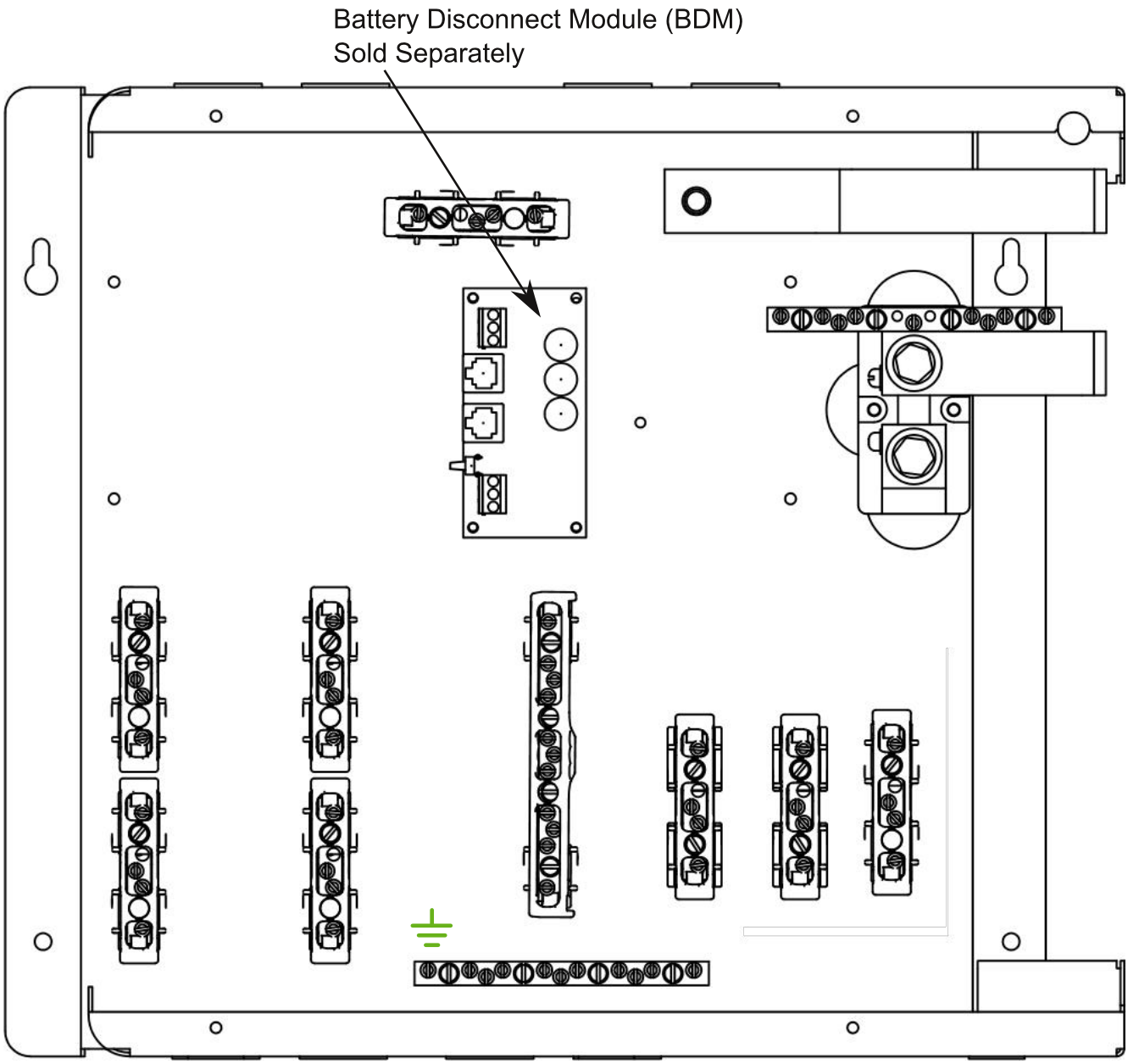

Breaker mounting bracket not shown

E-Panel Dimensions

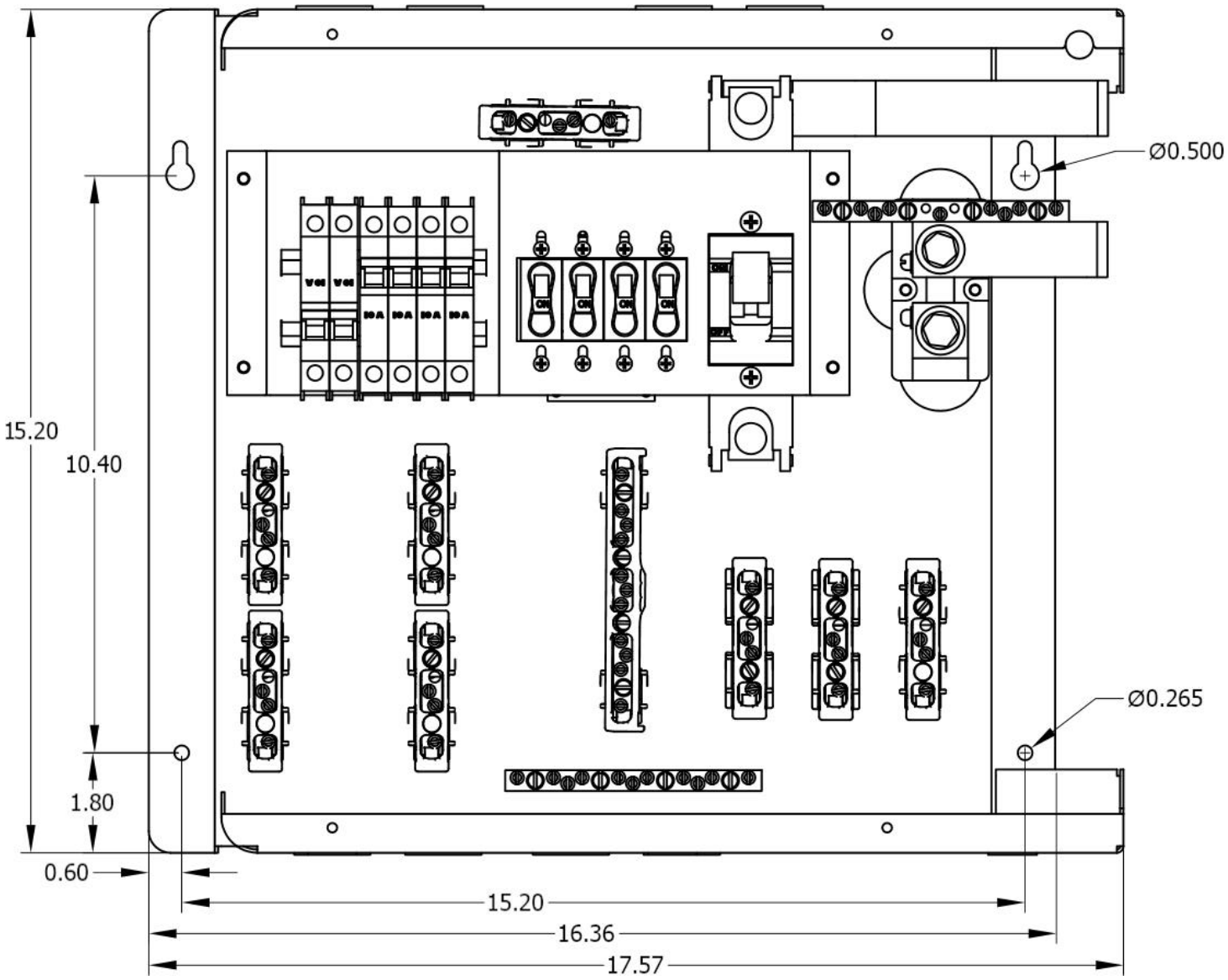

E-Panel Knockout Size and Location

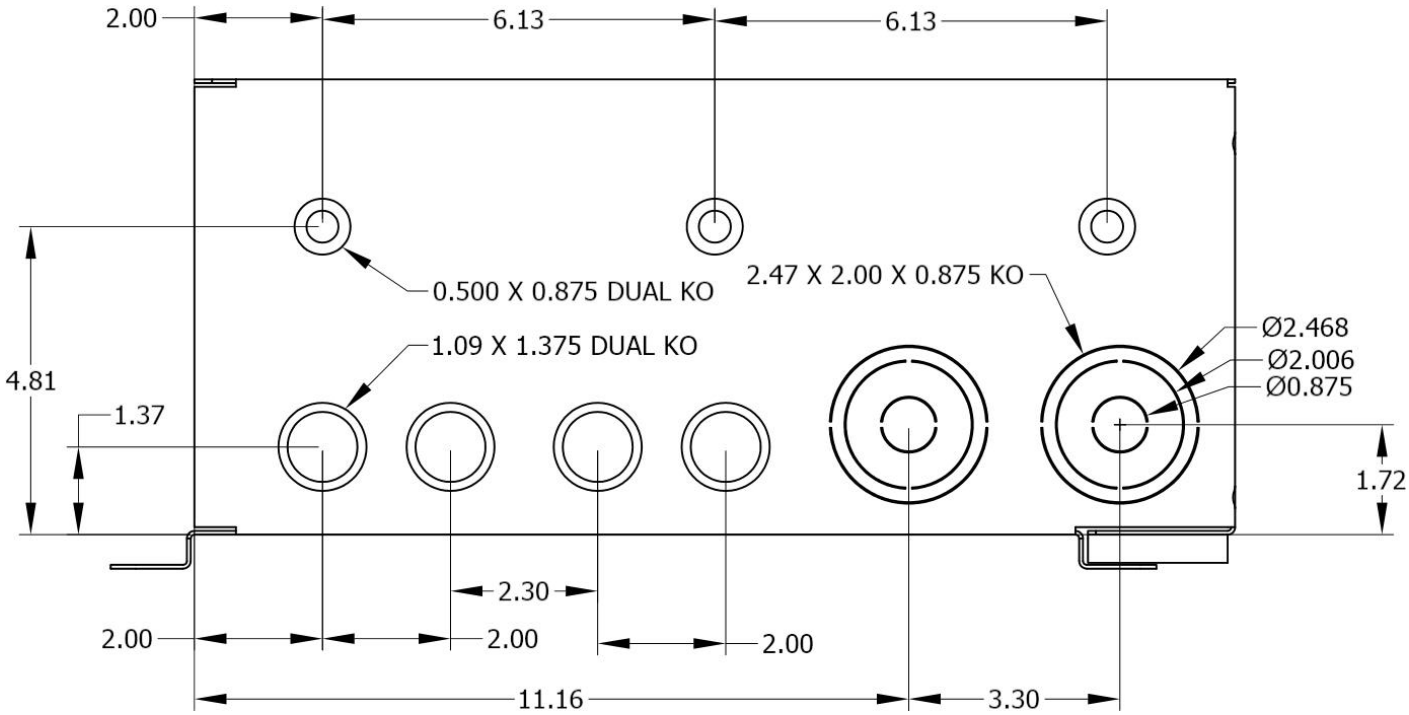

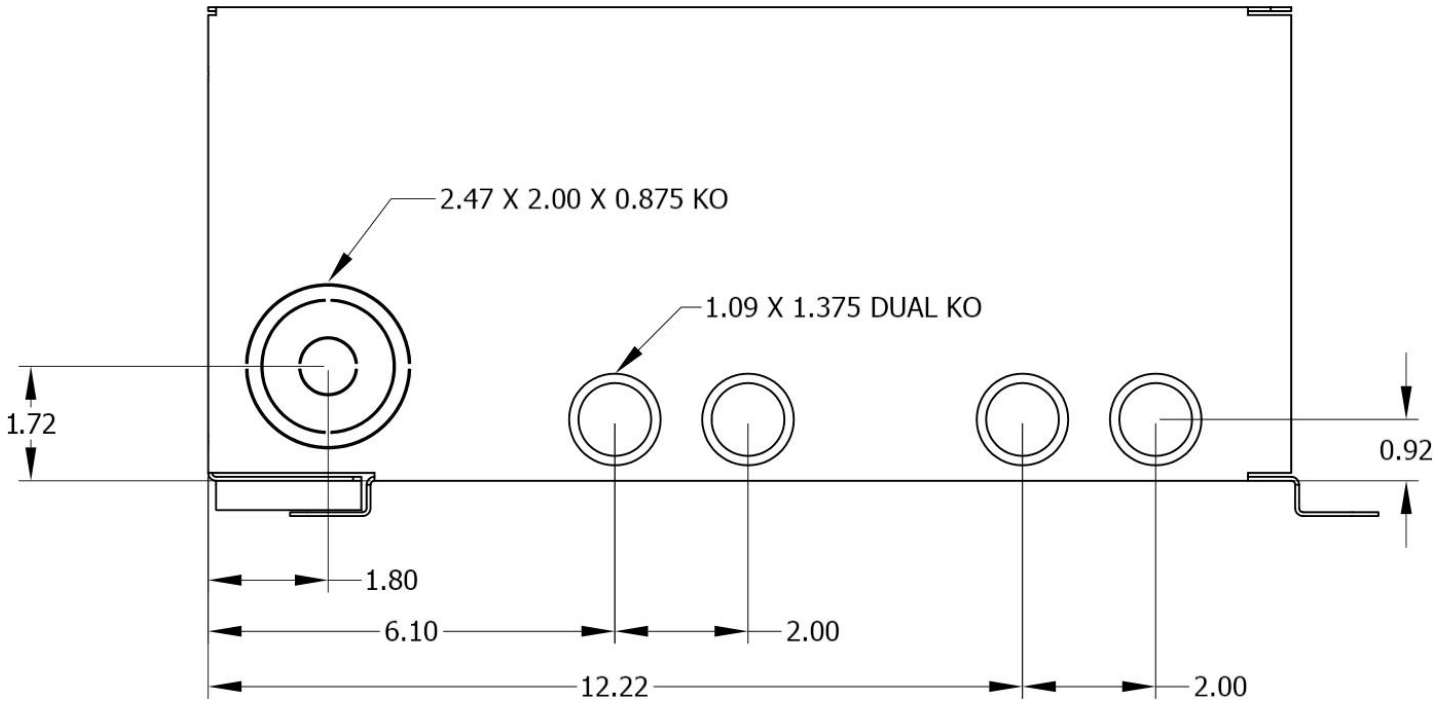

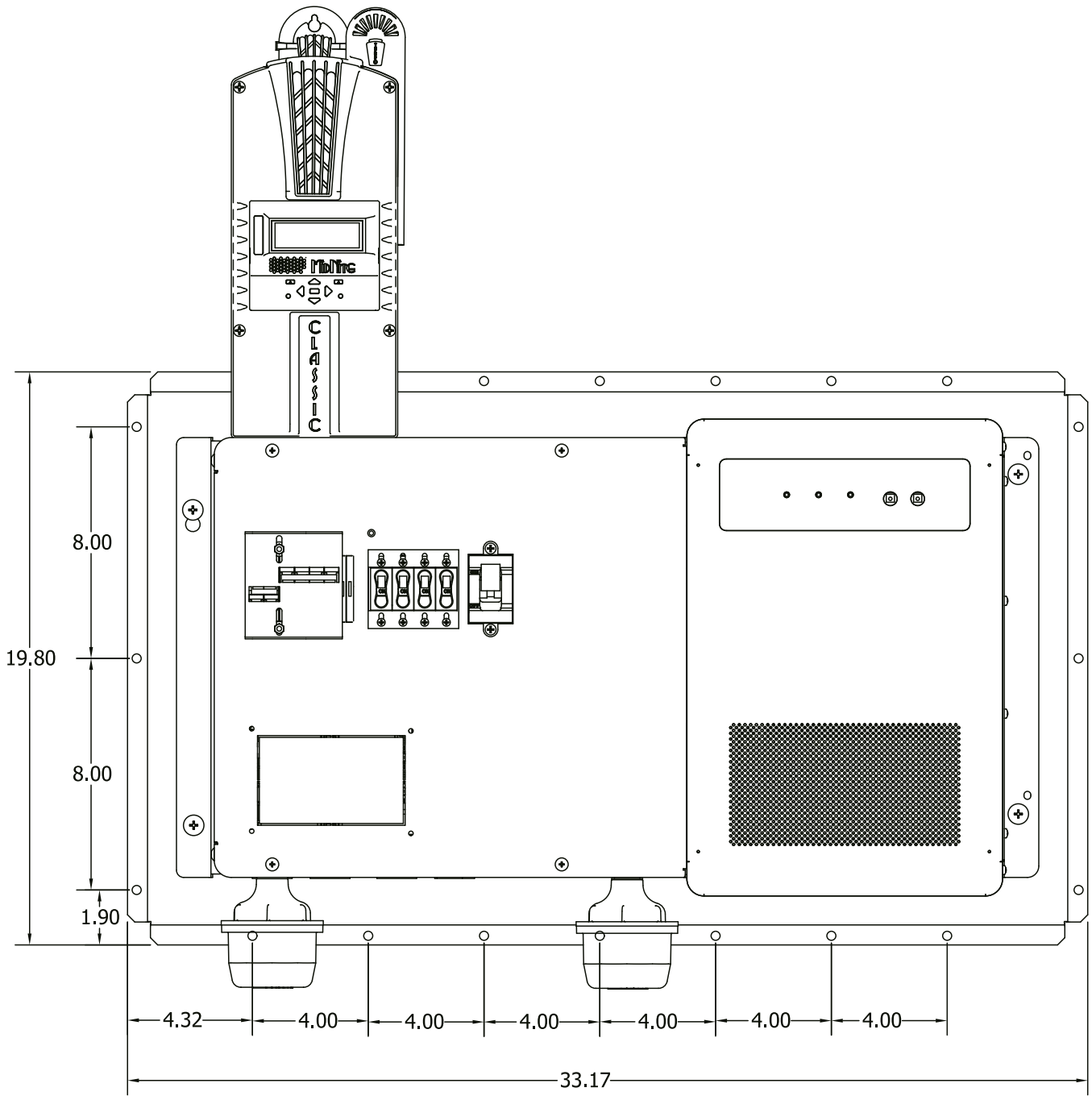

System mounting dimensions with optional Backplate.

Removing the E-Panel cover

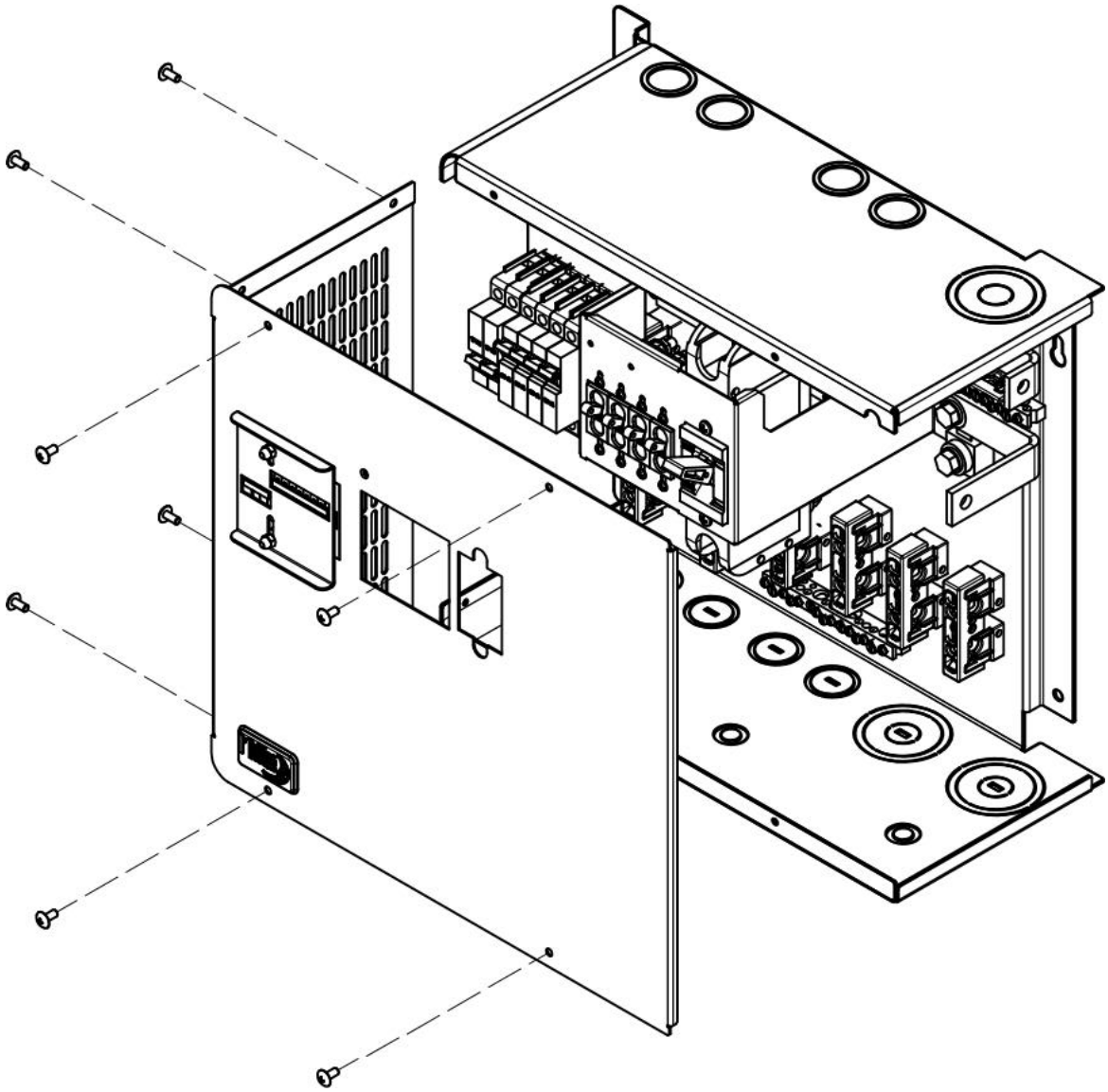

To remove the E-Panel cover

Remove the four screws on the front and the four screws on the left side.
The cover will now pull straight out toward you.

To Re-install reverse the steps shown above. If you have a slider installed to tie the breakers together as a bypass switch, ensure that the breakers are in the correct position (all up or all down) and that the slider engages the handles on the breakers.

Installing the XW-SCP

To install the XW-SCP to the front of the E-Panel remove the rectangular knockout at the lower left corner of the E-Panel.
Remove any sharp edges.
Route the Xanbus cable from the connection on the inverter to the connection on the XW-SCP and install the terminator if appropriate. A terminator is required at each end of the network. Refer to the documentation that came with your XW-SCP.

Secure the XW-SCP to the front cover with the four 6-32 X 5/8 screws and nuts supplied.

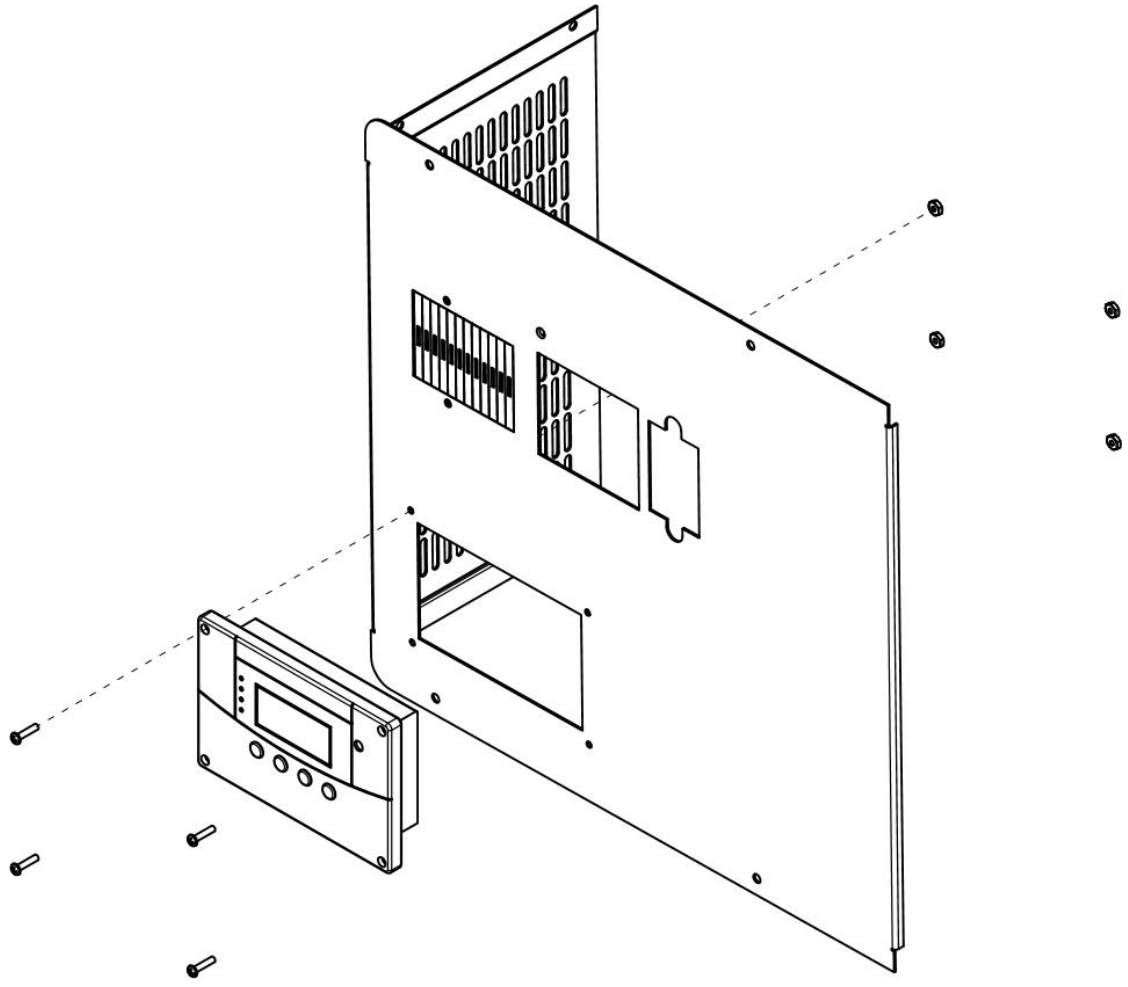

Installation Considerations

While the E-Panel can greatly simplify the wiring of an inverter system, the installation and wiring of electrical systems is a complex task and should only be attempted by qualified installation personnel.

The E-Panel is a Type 1 enclosure intended to be mounted in a dry location, protected from rain, snow etc.

The NEC requires clearance around the enclosure and 36" free and clear of obstructions in front of the installation.
Be sure to comply with NEC and local requirements for wiring and installation height

Wiring must be done in accordance with the National Electrical Code ANSI/NFPA 70. Use Class 1 wiring methods for field wiring connections to terminals of a Class 2 circuit. Use only 14-1/0 gauge AWM wire. Select the wire gauge used based on the protection provided by the circuit breakers/fuses..

The inverter and E-Panel together will be somewhat heavy. Be sure that the mounting surface can handle the weight. A minimum of six 2" long 1/4" (6mm) or larger lag screws into the wall studs are recommended. The backplate for the E-Panel and inverter has mounting holes at 4" spacing to accommodate studs on 16 or 24" centers.

It is desirable to keep battery cables as short as possible to reduce ripple current and voltage drop. The E-panel should be mounted near the batteries but not in the same compartment with flooded batteries. Flooded batteries produce hydrogen gas which may be ignited by sparks produced in the inverter or E-Panel during normal operation.

Free and easy access is required for the circuit breakers. Three feet in front of the E-Panel is required by the NEC. Ensure good airflow around the inverter for cooling.

You can simplify installation by installing and wiring any additional circuit breakers Prior to mounting the E-Panel on the wall.

Pre-wired systems: If your system is pre-wired you will need only to mount it on the wall and make just a few final connections. Refer to the installation and wiring sections for more information.

Installation

Tools Required:

Drill and drill bits for pilot holes
#2 Phillips screwdriver
Slotted screwdriver (A torque driver is recommended for all electrical connections)
Wrench or socket set for mounting
Wrench or socket set for DC Terminals
Wire strippers
Needle-nose pliers

Other materials needed for installation:

(these will vary based on system options)

Strain Reliefs,
Hardware for Mounting E-Panel, Inverter and Backplate
Wire/cable for AC and DC connections

Optional equipment and materials:

Classic Charge Controller,
Conduit, conduit nipples and fittings
Dinrail or panel mount circuit breakers -
MNSPD Surge Suppressors
Slider Kit - Ties breakers together for use as an AC bypass
MNBDM Battery Disconnect Module
MNRAC25 / MNRAC75 Solid State relay for use with AC coupled systems
Whiz Bang Jr for enhanced system monitoring

Accessories / Replacement parts

Should you require any accessories or replacement parts please visit www.midnitesolar.com and follow the link to products.

Installation Continued

Installation begins with selecting a location that is dry, accessible and able to support the weight of the system. Choose a location that minimizes wire lengths especially the battery cables.

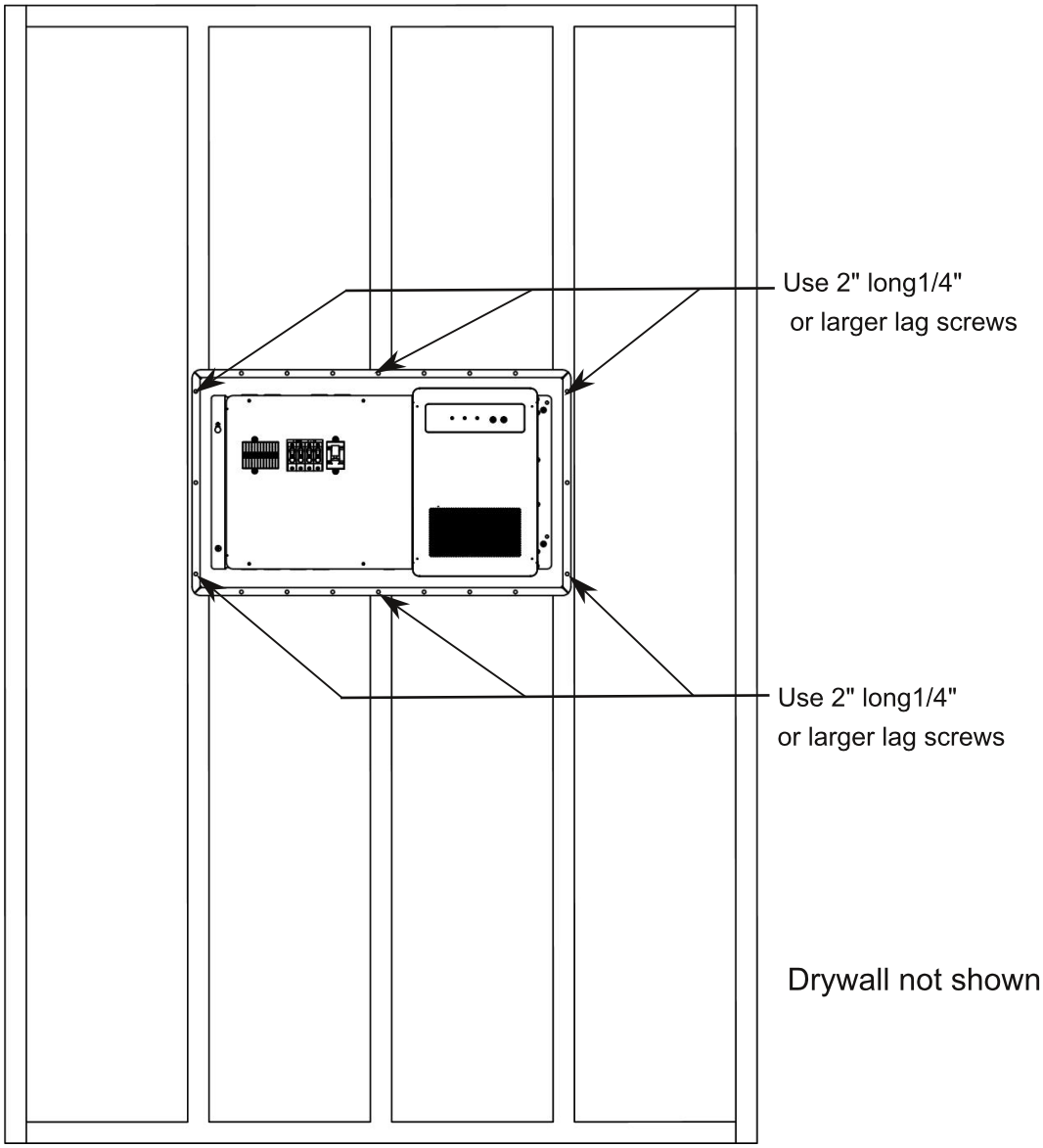

Example: Conext SW E-Panel with backplate wall mounted

Above, the E-Panel and inverter are mounted to the wall with the backplate.
The backplate can be bolted down to three studs. Observe height requirements maximum and minimum.
Tip: A 2X4 may be temporarily mounted on the wall where you want the bottom of the system to be. Then you can rest the bottom of the backplate on the 2X4 while installing the system. Be sure to mount the 2 x 4 securely enough to hold the system.

Installation Continued

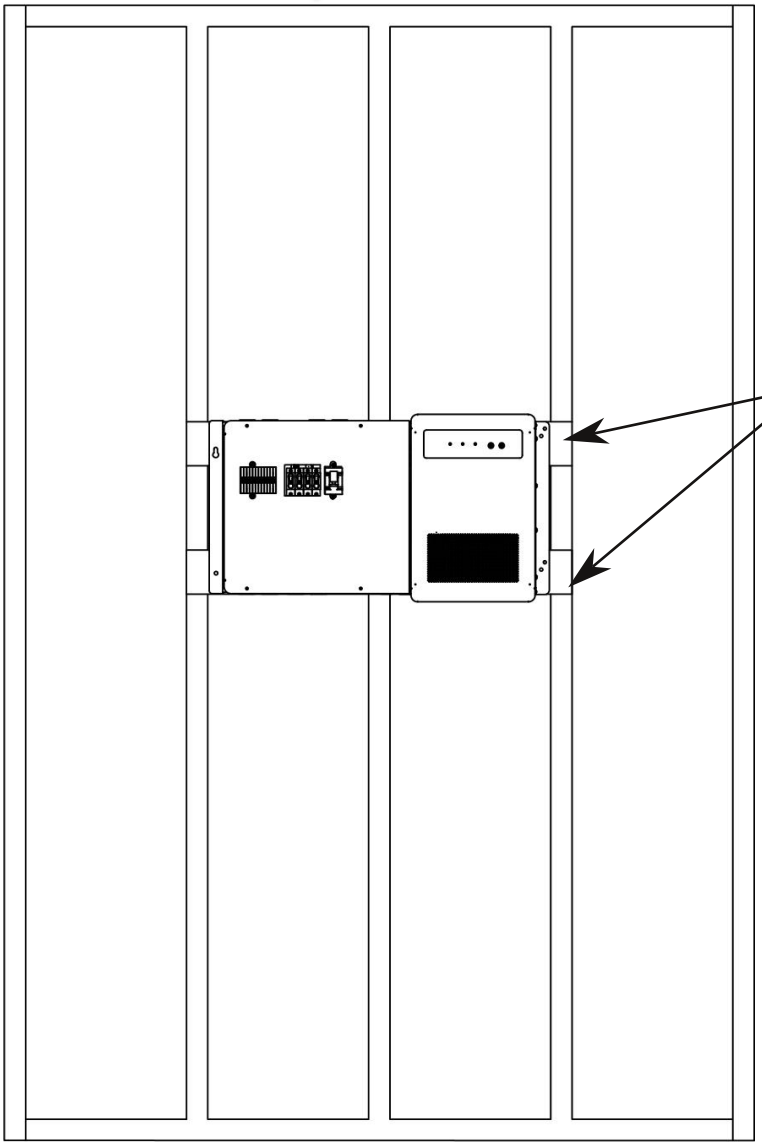

Example: Wall mounting the Conext SW E-Panel and Conext SW Inverter

Above the E-Panel and inverter are mounted to the wall without the backplate.
In this installation 2X4s were used to span the studs. This helps to ensure a secure installation.

Once the system is mounted on the wall the final connections can be made.
These include connections to the battery bank and the AC input and output connections.
The following wiring diagrams show the various configurations.

DC Wiring

Danger!

Potentially hazardous voltages may be present. Even at low voltages batteries can produce incredibly large currents. Ensure that all sources of power are disconnected.

Tensions potentiellement dangereux peuvent être présents. Même à de faibles tensions batteries peuvent produire incroyablement grands courants. Veiller à ce que toutes les sources d'alimentation sont débranchés.

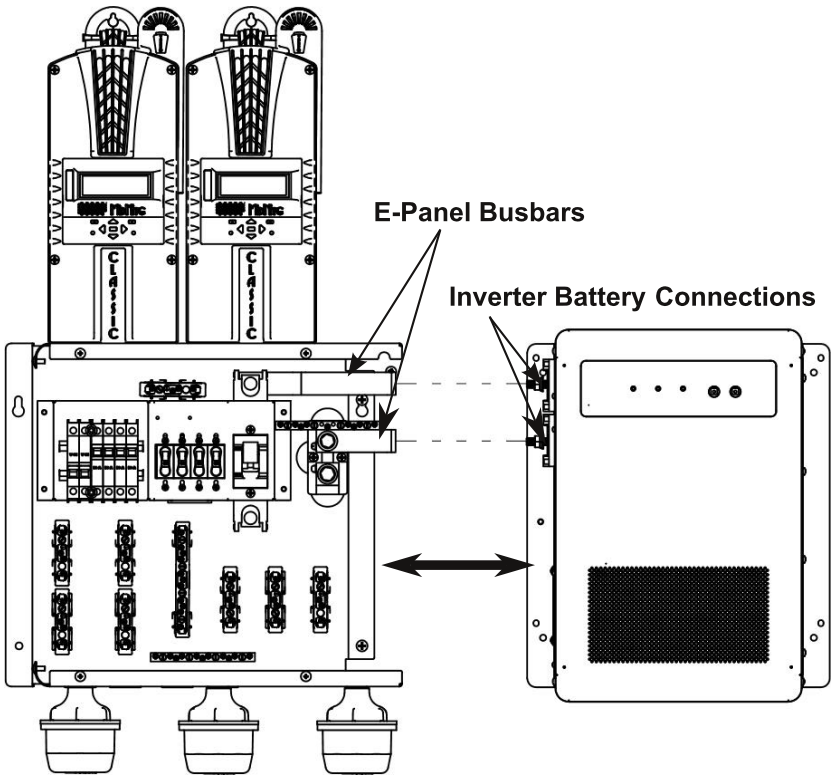

Inverter Battery connections.

Start with the inverter mounted to the wall or backplate and the E-Panel ready to mount. It can be done the opposite, E-Panel mounted and inverter ready to mount, but this is more difficult due to the weight of the inverter.
To make inverter battery connections line up the inverter battery connections and the E-Panel busbars. The busbars are left loose on the E-Panel to make it easy to line up the connections.
Slide the inverter or E-Panel until the inverter battery connections go through the holes in the E-Panel busbars. The plastic battery terminal covers supplied with the inverter are not used with the busbars.

Ensure that there is nothing between the busbars and the inverter battery connections such as a washer or other material. These are high current connections, it is critically important that these connections be clean and torqued to the value shown in the chart.
Tighten the connections at the E-Panel side of the busbars to the torque shown in the chart in Appendix A. Now complete the mounting of the E-Panel (or inverter) to the wall or backplate with the hardware selected for this.

DC Wiring continued

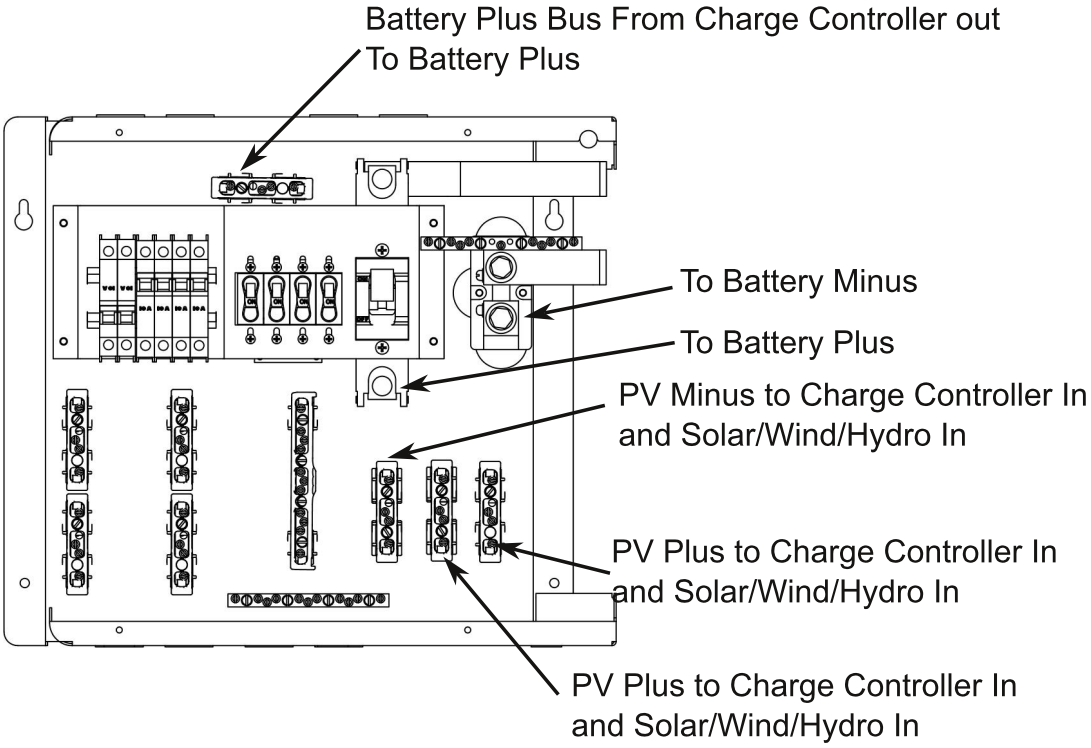

AC Wiring

Danger!

Potentially dangerous voltages may be present. Ensure that all sources of power are disconnected.

Des tensions potentiellement dangereuses peuvent être présentes. Veiller à ce que toutes les sources d'alimentation sont débranchés.

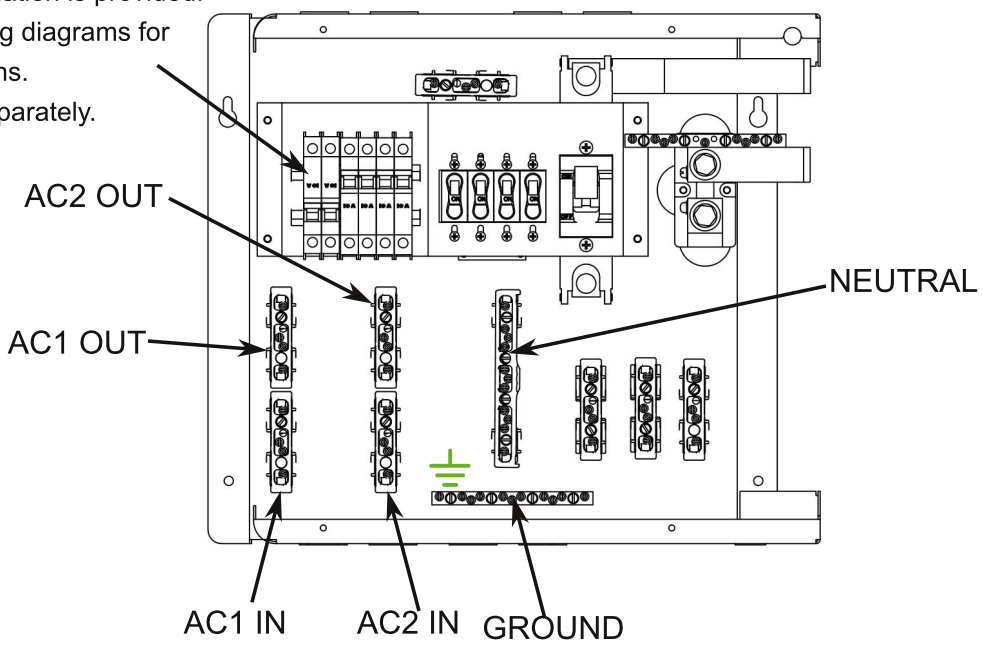

Important!

Neutral and ground must be tied together and at only one place. This is normally at the service entrance. For an off grid system this can be done in the E-Panel. Local inspectors may want this bond to be at another location such as a distribution panel. This will work just as well.

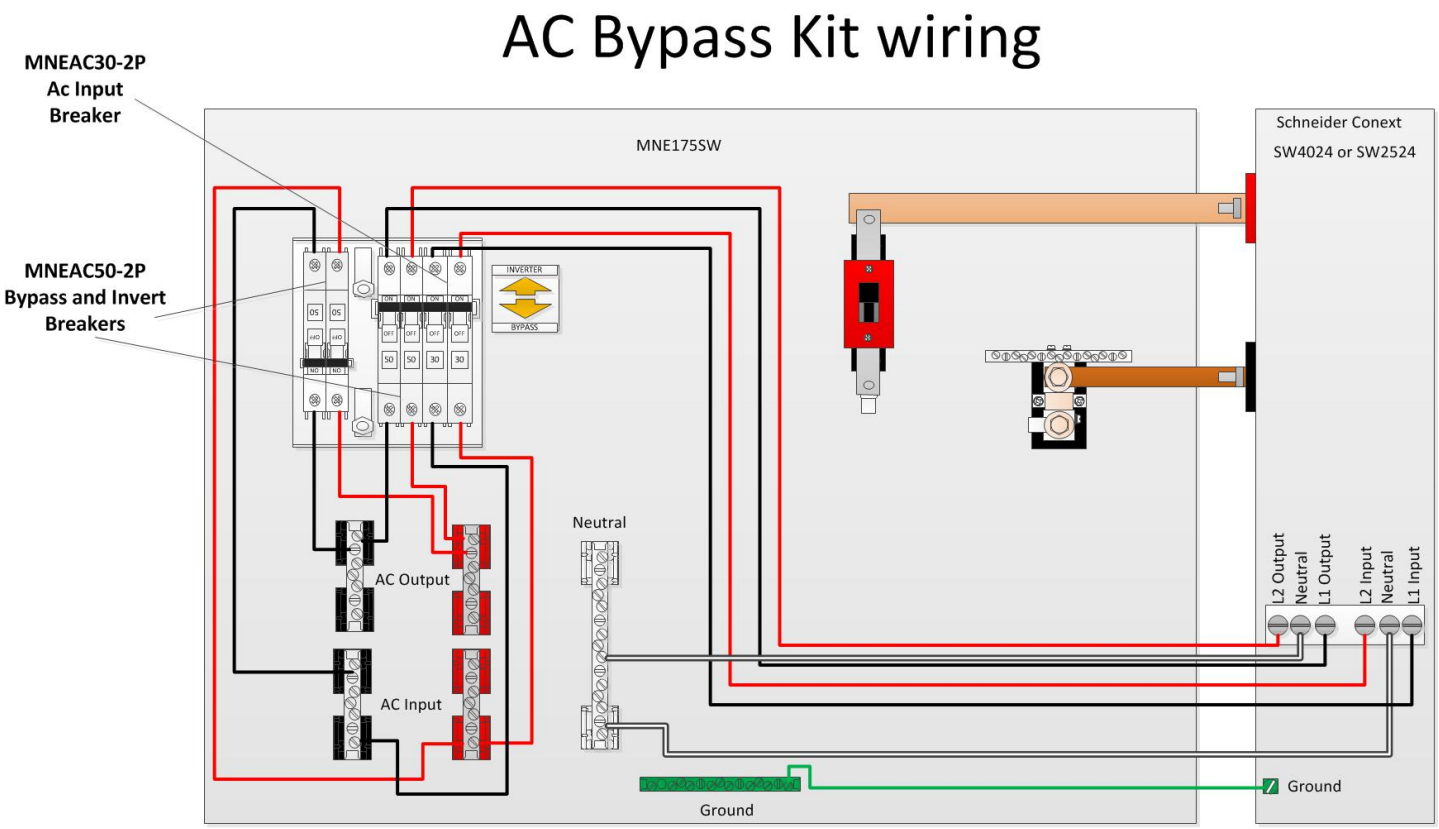

Single Inverter with AC Bypass

Above: AC wiring for a single inverter with bypass switch. Use a minimum of 8 AWG wire for a 50 amp bypass or a minimum of 6 AWG wire for a 60 amp bypass. The ground wire should be at least the same gauge as the largest wire used.

When the slider is in the "UP" position Inverter power will be at the AC Output terminal blocks. When the slider is in the down position Grid/Gen power will be at the AC Output terminal blocks.

Torque all connections according to the chart in Appendix A. Re-torque the circuit breaker connections after one hour. Do not skip this step. The copper wire will cold flow after the initial tightening and may become loose creating a potential hazard.

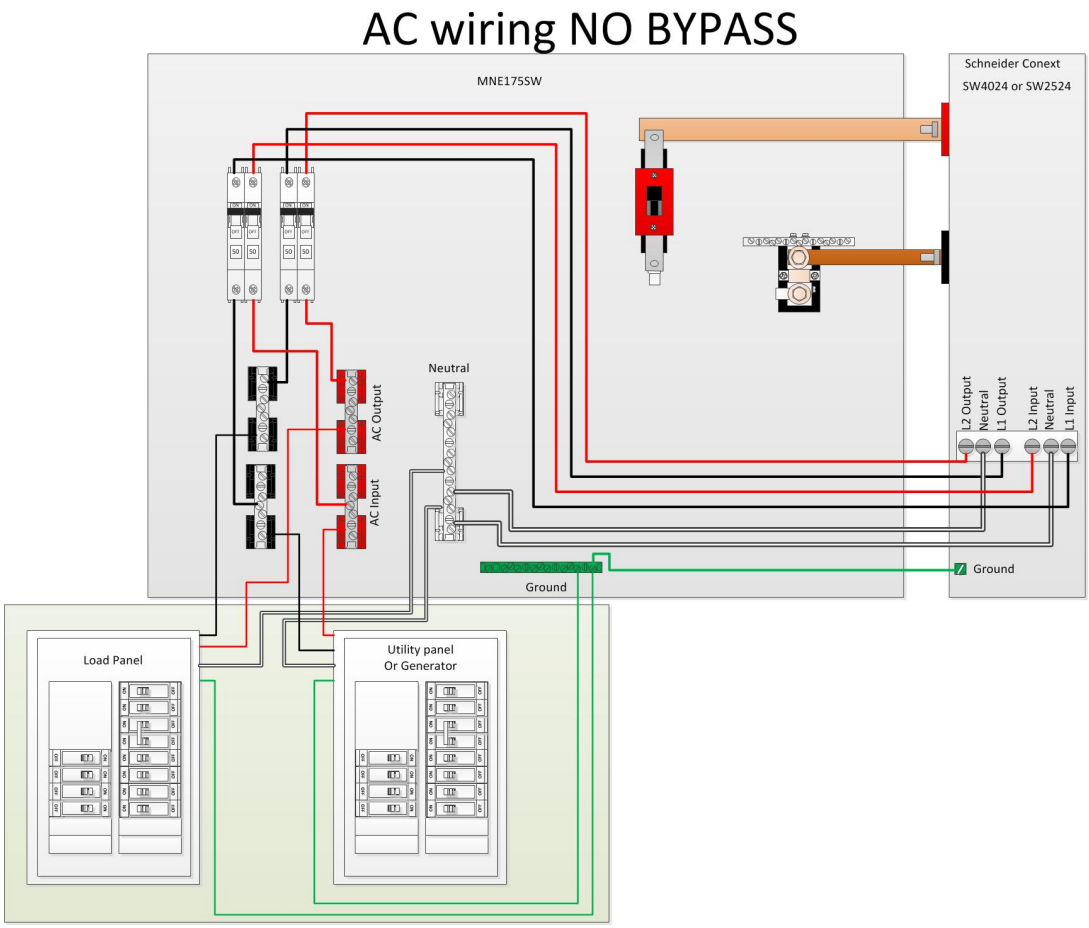

Single Inverter without AC Bypass

Above: AC wiring for a single inverter without bypass switch. Use a minimum of 8 AWG wire. The ground wire should be at least the same gauge as the largest wire used.

Torque all connections according to the chart in Appendix A. Re-torque the circuit breaker connections after one hour. Do not skip this step. The copper wire will cold flow after the initial tightening and may become loose creating a potential hazard.

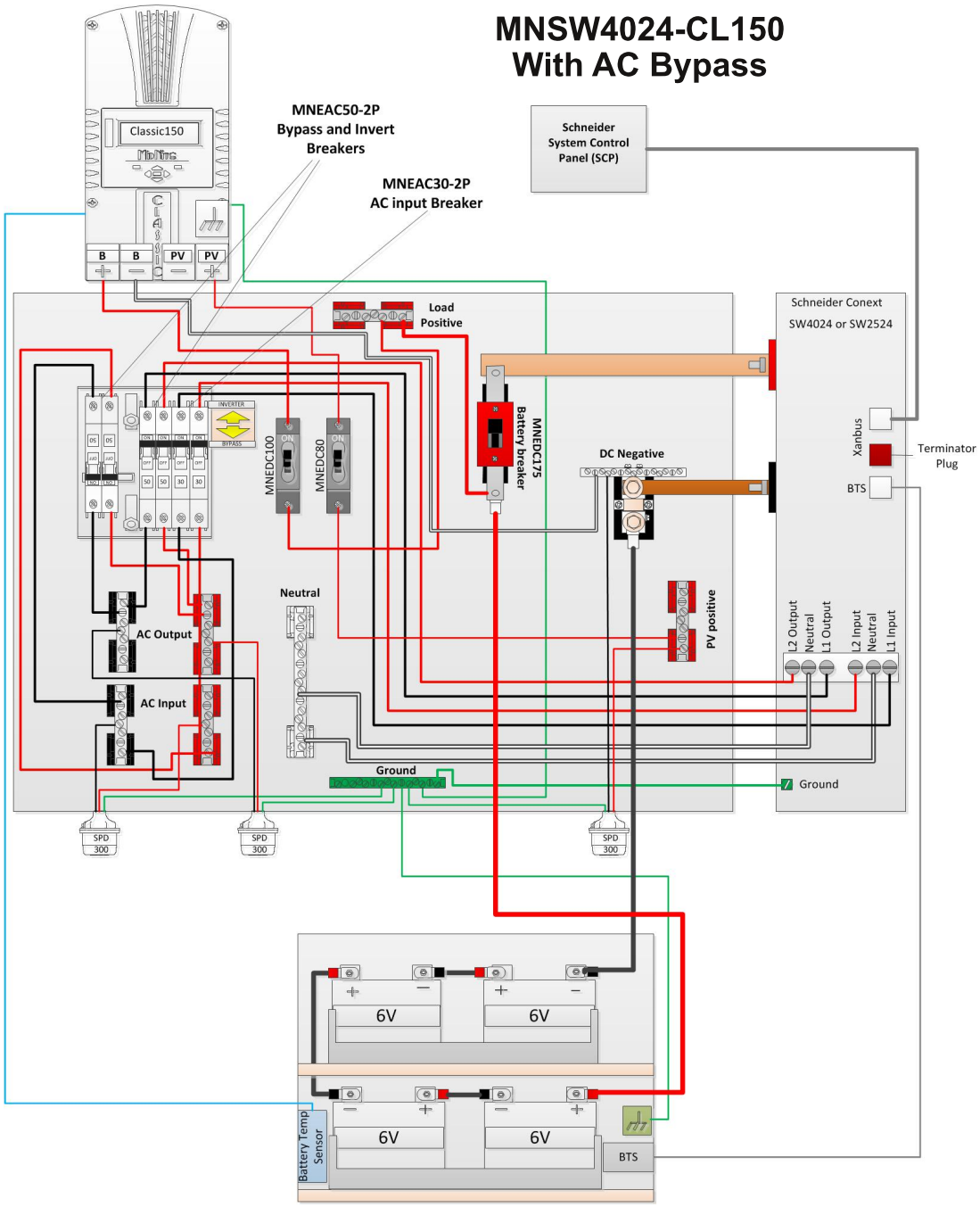

Single Inverter with AC Bypass

Above: AC wiring for a single inverter with bypass switch. Use a minimum of 8 AWG wire for a 50 amp bypass or a minimum of 6 AWG wire for a 60 amp bypass. The ground wire should be at least the same gauge as the largest wire used.

Torque all connections according to the chart in Appendix A. Re-torque the circuit breaker connections after one hour. Do not skip this step. The copper wire will cold flow after the initial tightening and may become loose creating a potential hazard.

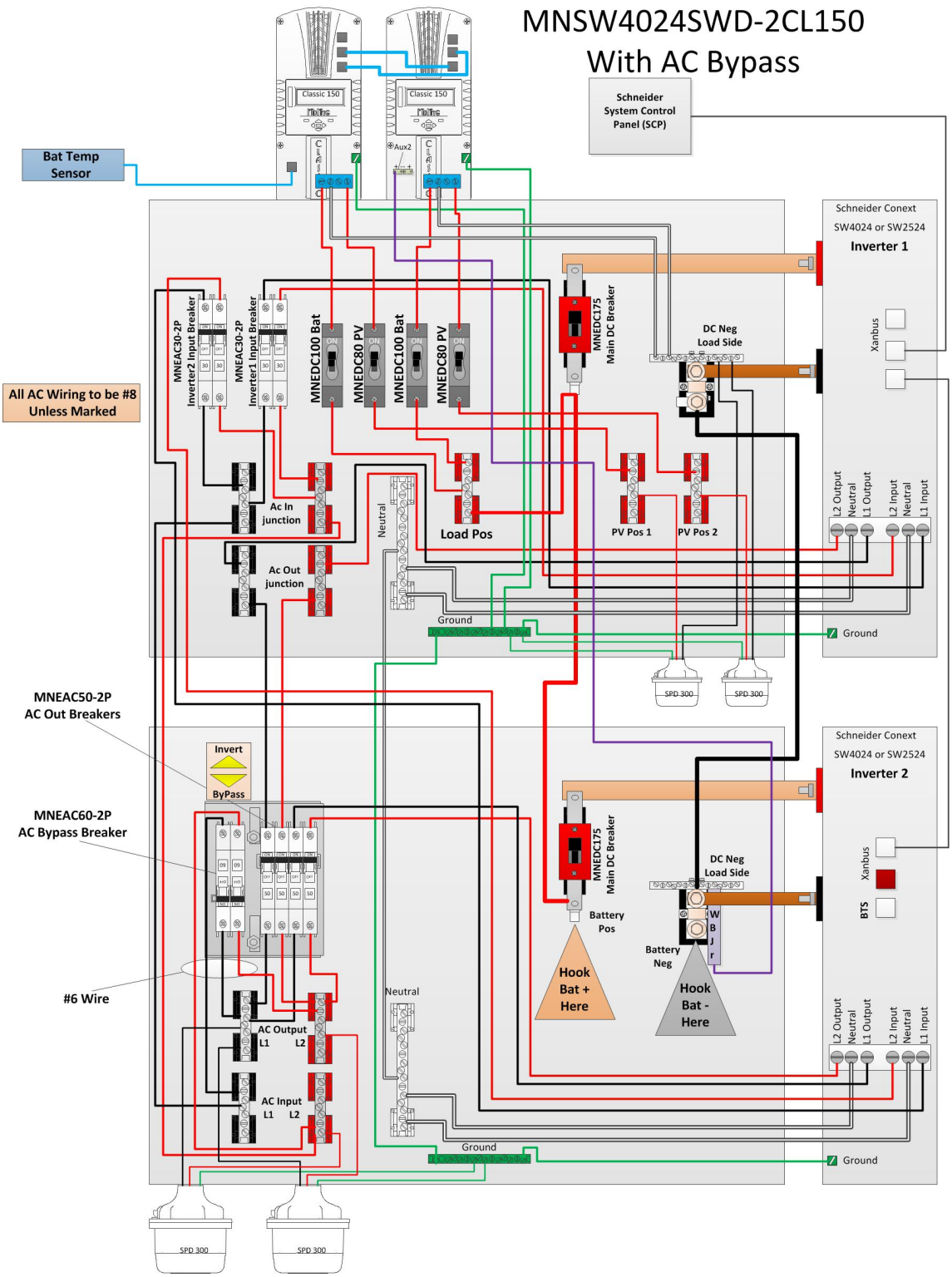

Important!
When stacking inverters make a neutral connection from each inverter's Neutral input to the main distribution panel Neutral bus and make a neutral connection from each inverter's Neutral output to the load distribution panel Neutral bus.

Dans une configuration à multiples unités, branchez les deux câbles d'entrée CA neutres ensemble sur le panneau de distribution principal et les deux câbles de sortie CA neutres sur un emplacement neutre isolé du panneau de distribution CA de l'onduleur.

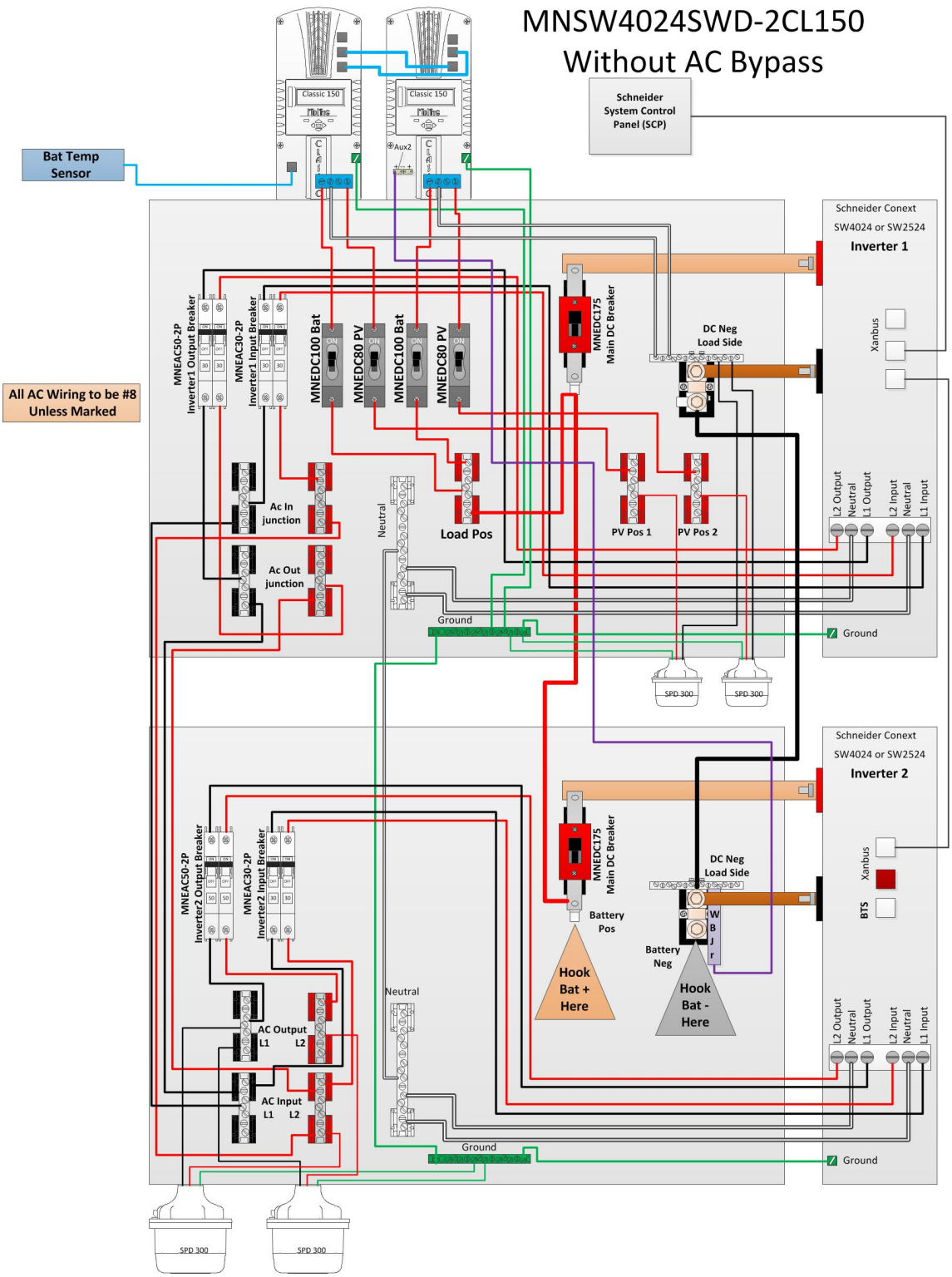

Important!
When stacking inverters make a neutral connection from each inverter's Neutral input to the main distribution panel Neutral bus and make a neutral connection from each inverter's Neutral output to the load distribution panel Neutral bus.

Dans une configuration à multiples unités, branchez les deux câbles d'entrée CA neutres ensemble sur le panneau de distribution principal et les deux câbles de sortie CA neutres sur un emplacement neutre isolé du panneau de distribution CA de l'onduleur.

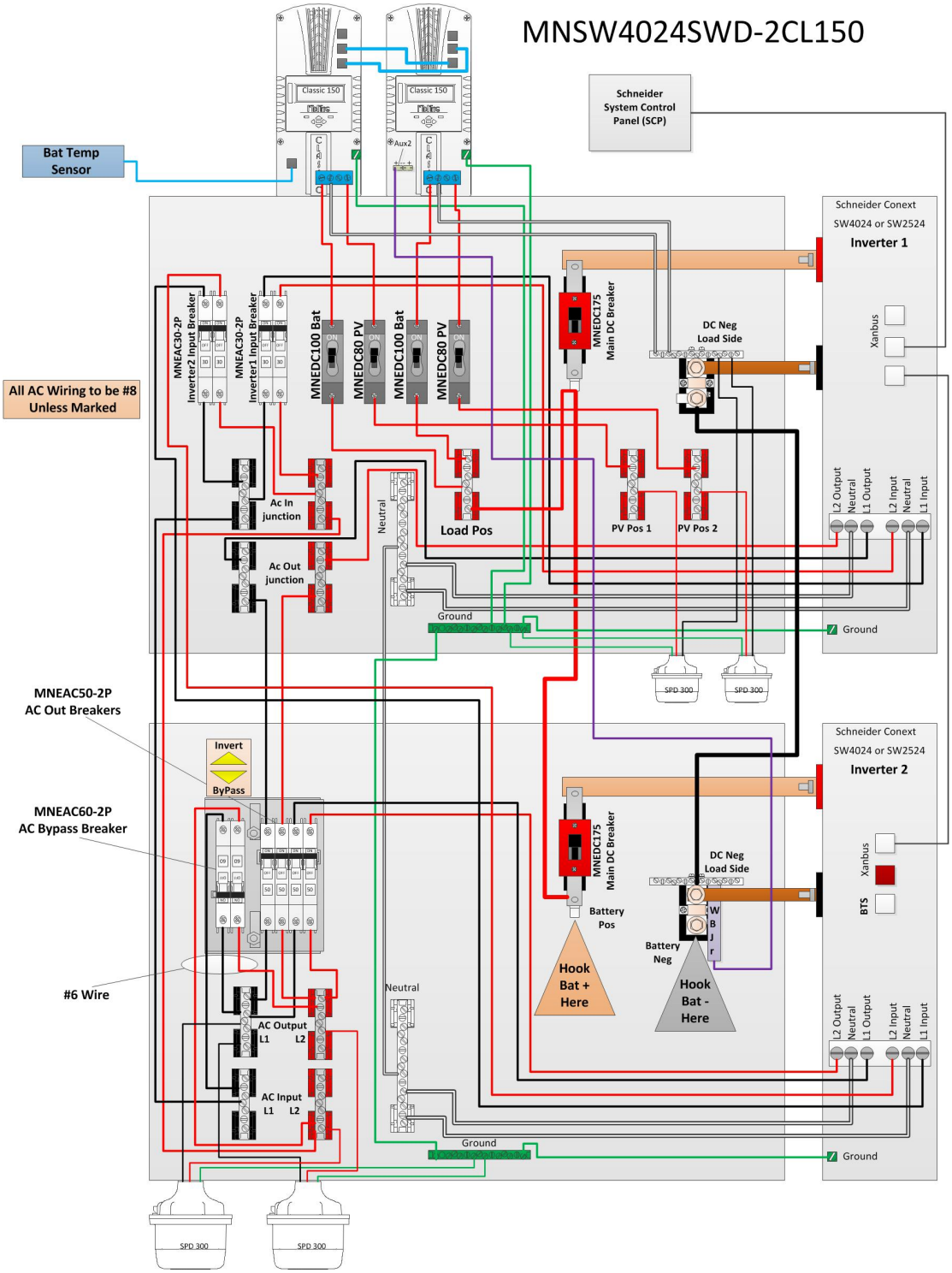

Important!
When stacking inverters make a neutral connection from each inverter's Neutral input to the main distribution panel Neutral bus and make a neutral connection from each inverter's Neutral output to the load distribution panel Neutral bus.

Dans une configuration à multiples unités, branchez les deux câbles d'entrée CA neutres ensemble sur le panneau de distribution principal et les deux câbles de sortie CA neutres sur un emplacement neutre isolé du panneau de distribution CA de l'onduleur.

Slider Kit Installation

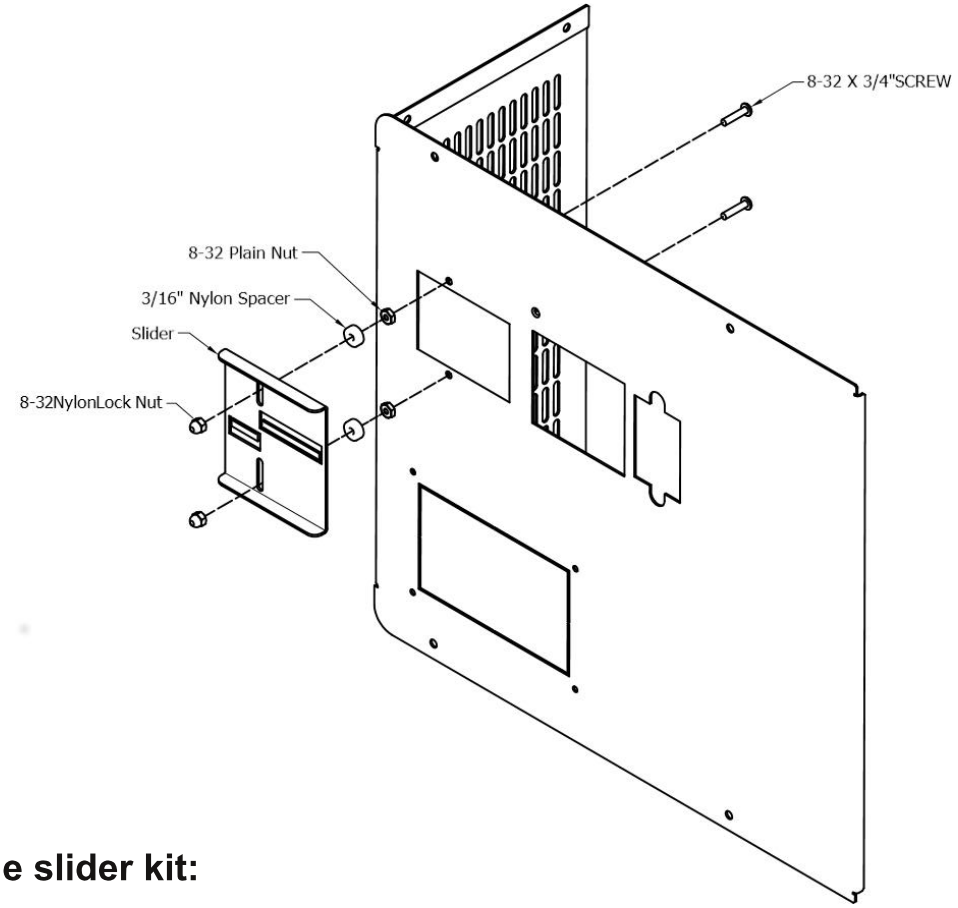

To install the slider kit:

The Slider kit comes with
(2) 8-32 X 3/4" screws,
(2) 8-32 plain nuts,
(2) 3/16" nylon spacers,
(1) slider and,
(2) 8-32 lock nuts.

Install the screws from the inside of the cover and secure with the plain nuts.
Place the spacers on the screws as shown.
Place the slider on the screws on top of the spacers.
Secure with the lock nuts by tightening the nuts until they are just firm. Back off the nuts about a half turn until the slider moves freely without binding.

When Re-installing the top cover ensure that the circuit breakers that the slider fits over are all up or all down and guide the slider into position over them.
Test for proper operation (all breakers move together).

Pre-Wired and Dual Systems

Dual system on Backplates. Optional equipment shown.

On Pre-Wired systems with Classic Charge Controllers, the controller ships disconnected in its own box packed in with the E-panel.
All the wiring for the Classic is pre-cut, stripped and in place. All that needs to be done is to secure the Classic with the conduit nipples supplied, add any additional support desired and connect the pre-cut, marked wires.

Appendix A Tightening torque

Busbar Torque Values

Small Busbar Screws	14 - 10 AWG 20 In Lbs.
Small Busbar Screws	8 AWG 25 In Lbs.
Small Busbar Screws	6 AWG 35 In Lbs.
Large Busbar Screws	14 - 10 AWG 35 In Lbs.
Large Busbar Screws	8 AWG 40 In Lbs.
Large Busbar Screws	6 - 4 AWG 45 In Lbs.
Large Busbar Screws	3 - 1/0 AWG 50 In Lbs.

Appendix B Breaker Torque Values

MNDC-GFP63 Breaker	20 In-Lbs (2.3NM)
MNDC-GFP80 Breaker	30 In-Lbs (3.4NM)
MNDC-GFP100-Dual Breaker	30 In-Lbs (3.4NM)
MNDC-GFP50-300 Breaker	20 In-Lbs (2.3NM)
MNEAC10 to MNEAC20 Breaker	20 In-Lbs (2.3NM)
MNEAC30 to MNEAC60 Breaker	20 In-Lbs (2.3NM)
MNEAC15-2P, MNEAC20-2P Breaker	20 In-Lbs (2.3NM)
MNEAC30-2P to MNEAC60-2P Breaker	20 In-Lbs (2.3NM)
MNEAC15QZD to MNEAC60QZD Breaker	20 In-Lbs (2.3NM)
MNEAC30QZD2P to MNEAC60QZD2P Breaker	20 In-Lbs (2.3NM)
MNEAC30QZD3P, MNEAC50QZD3P Breaker	20 In-Lbs (2.3NM)
MNEDC5 to MNEDC100 Breaker	30 In-Lbs (3.4NM)
MNEDC125 Breaker	30 In-Lbs (3.4NM)
MNEDC175 & MNEDC250 Breaker	15 Ft-Lbs (20.4NM)
MNEDC60-300, MNEDC80-300 Breaker	30 In-Lbs (3.4NM)
MNEPV20/50-300 Breaker	20 In-Lbs (2.3NM)
MNEPV1 to MNEPV63 Breaker	20 In-Lbs (2.3NM)
MNEPV80, MNEPV100 Breaker	20 In-Lbs (2.3NM)
MNEPV7-300 to MNEPV50-300 Breaker	20 In-Lbs (2.3NM)
MNEPV16-600 and MNEPV20-600 Breaker	20 In-Lbs (2.3NM)

Appendix C Wire size by breaker size

Wire size based on breaker size @75°C.

Breaker Size	AWG Wire Size	Wire Size mm2
10 Amp	16 AWG	1.31 mm2
15 Amp	14 AWG	2.08 mm2
20 Amp	12 AWG	3.31 mm2
30 Amp	10 AWG	5.26 mm2
40 Amp	8 AWG	8.36 mm2
50 Amp	8 AWG	8.36 mm2
60 Amp	6 AWG	13.3 mm2
70 Amp	4 AWG	21.1 mm2
80 Amp	4 AWG	21.1 mm2
90 Amp	2 AWG	33.6 mm2
100 Amp	2 AWG	33.6 mm2
125 Amp	1/0 AWG	53.5 mm2
175 Amp	2/0 AWG	67.4 mm2
250 Amp	4/0 AWG	107 mm2

MIDNITE SOLAR INC. LIMITED WARRANTY
MidNite Solar Power electronics, sheet metal enclosures and accessories

MidNite Solar Inc. warrants to the original customer that its products shall be free from defects in materials and workmanship. This warranty will be valid for a period of five (5) years for all products except the MNKID Charge Controller which will be two (2) years.

At its option, MidNite Solar will repair or replace at no charge any MidNite product that proves to be defective within such warranty period. This warranty shall not apply if the MidNite Solar product has been damaged by unreasonable use, accident, negligence, service or modification by anyone other than MidNite Solar, or by any other causes unrelated to materials and workmanship. The original consumer purchaser must retain original purchase receipt for proof of purchase as a condition precedent to warranty coverage. To receive in-warranty service, the defective product must be received no later than two (2) weeks after the end of the warranty period. The product must be accompanied by proof of purchase and Return Authorization (RA) number issued by MidNite Solar.
For an RMA number contact MidNite Solar Inc., 17722 67th Ave NE, Arlington, WA 98223 (360) 403-7207.
Purchasers must prepay all delivery costs or shipping charges to return any defective MidNite Solar product under this warranty policy. Except for the warranty that the products are made in accordance with, the specifications therefore supplied or agreed to by customer:

MIDNITE SOLAR MAKES NO WARRANTY EXPRESSED OR IMPLIED, AND ANY IMPLIED WARRANTY OF MERCHANTABILITY OR FITNESS FOR A PARTICULAR PURPOSE WHICH EXCEEDS THE FOREGOING WARRANTY IS HEREBY DISCLAIMED BY MIDNITE SOLAR AND EXCLUDED FROM ANY AGREEMENT MADE BY ACCEPTANCE OF ANY ORDER PURSUANT TO THIS QUOTATION. MIDNITE SOLAR WILL NOT BE LIABLE FOR ANY CONSEQUENTIAL DAMAGES, LOSS OR EXPENSE ARISING IN CONNECTION WITH THE USE OF OR THE INABILITY TO USE ITS GOODS FOR ANY PURPOSE WHATSOEVER. MIDNITE SOLAR'S MAXIMUM LIABILITY SHALL NOT IN ANY CASE EXCEED THE CONTRACT PRICE FOR THE GOODS CLAIMED TO BE DEFECTIVE OR UNSUITABLE.

Products will be considered accepted by customer unless written notice to the contrary is given to MidNite Solar within ten (10) days of such delivery to customer. MIDNITE SOLAR is not responsible for loss or damage to products owned by customer and located on MIDNITE SOLAR'S premises caused by fire or other casualties beyond MIDNITE SOLAR's control. This warranty is in lieu of all other warranties expressed or implied.

MIDNITE SOLAR INC. 17722 67TH AVE NE ARLINGTON, WA 98223
Email:
info@midnitesolar.com
PH: 360-403-7207 FAX: 360-691-6862