WATTSUN™
SOLAR TRACKERS

WATTSUN DUAL AXIS SOLAR TRACKER INSTALLATION INSTRUCTIONS

****

INSTRUCTIONS FOR THE FOLLOWING TRACKERS:

SIEMENS 10 THRU 16 MODULE	SOLAREX 8 THRU 12 MODULE
HOXAN 8 THRU 12 MODULE	KYOCERA 8 THRU 12 MODULE

THESE TRACKERS ARE ALL CONFIGURED AS 2 ROWS OF MODULES MOUNTED VERTICALLY ON THE FRAME.

CONGRATULATIONS, you have purchased the finest solar tracker available. Designed and constructed of only the best quality materials, the tracker is designed to last as long as the modules mounted on it. With proper installation, the unit will provide years of trouble free service while maximizing your solar power production.

Stainless steel hardware is optional and recommended for high humidity and salt laden environments. Stainless steel hardware is available from the Wattsun Corporation at an additional cost.

TOOLS NECESSARY:

2 EA 15/16" WRENCHES OR ADJUSTABLE WRENCHES
2 EA 3/4" WRENCHES OR ADJUSTABLE WRENCHES
2 EA 9/16" WRENCHES
SAE SOCKET WRENCH SET WITH RATCHET & EXTENSION
2 EA 1/2" WRENCHES
WIRE STRIPPERS/CUTTERS
FLAT SCREWDRIVER
PHILLIPS SCREWDRIVER
RUBBER MALLET
HAMMER
8 FOOT A-FRAME LADDER
ELECTRICAL TAPE
3/8" DRILL

The Wattsun tracker requires a length of galvanized steel schedule 40 pipe for use as a mast. Specifications for this pipe can be found on the data sheet enclosed for your tracker.

NEVER UNSCREW THE INNER TUBE OF THE ACTUATORS AS THIS WILL DESTROY THE FACTORY PRESET MECHANICAL UPPER AND LOWER LIMITS.

WARNING: If the Wattsun solar tracker is not installed to manufacturer's specifications, such failure to properly install unit may cause tracker malfunction and or serious bodily injury or death. This tracker moves, therefore tracker should be situated away from anybody or anything who or which may come in contact with it as it moves. KEEP CHILDREN AWAY FROM TRACKER.

ARRAY TECHNOLOGIES, INC.
614 2nd St. SW Albuquerque, NM 87103 505-242-8024

A MASTHEAD CLAMP:
Heavy steel clamp (gold colored) for attachment to top of pipe mast.

B MAIN PIVOT ATTACHMENT:
heavy steel part (gold colored) with bushings for attachment to masthead clamp.

C ELEVATION SUPPORT TUBE:
2" square alum. tube with rubber connectors and wire protruding from end.

D ELEVATION ACTUATOR:
Motorized linear actuator, shorter in length than azimuth actuator.

E CENTER AZIMUTH PIVOT BRACKET:
4-1/2 wide U shaped bracket (gold colored) with four bolts protruding from bottom.

F END AZIMUTH PIVOT BRACKETS:
(2 EA.) 2-1/2" wide U shaped brackets (gold colored) with U-bolt attached.

H CENTER AZIMUTH STRUT:
4" X 2" aluminum channel with module mounting holes.

I END AZIMUTH STRUTS:
(2 EA) 2" X 2" aluminum channels with module mounting holes.

J END CAP CHANNELS:
(2 EA) 2-1/4" X 7/8" aluminum channels with six holes on flange.

K CROSS SUPPORT TUBES:
(1 OR 2 EA. depending on model) 2" X 2" square aluminum tube(s) with no holes and black plastic end caps.

L LOOSE U-BOLTS:
(3 OR 6 EA. depending on model) 2" X 3" X 5/16" U-bolts with nuts and lock washers.

M AZIMUTH ACTUATOR:
Motorized linear actuator, longer in length than elevation actuator.

N AZIMUTH ACTUATOR EYELET BRACKET:
Steel bracket (gold colored) with 2 U-bolts and 1/2" bolt between tabs.

O CONTROLLER BOX:
White box with Wattsun logo on cover with grey shadepole.

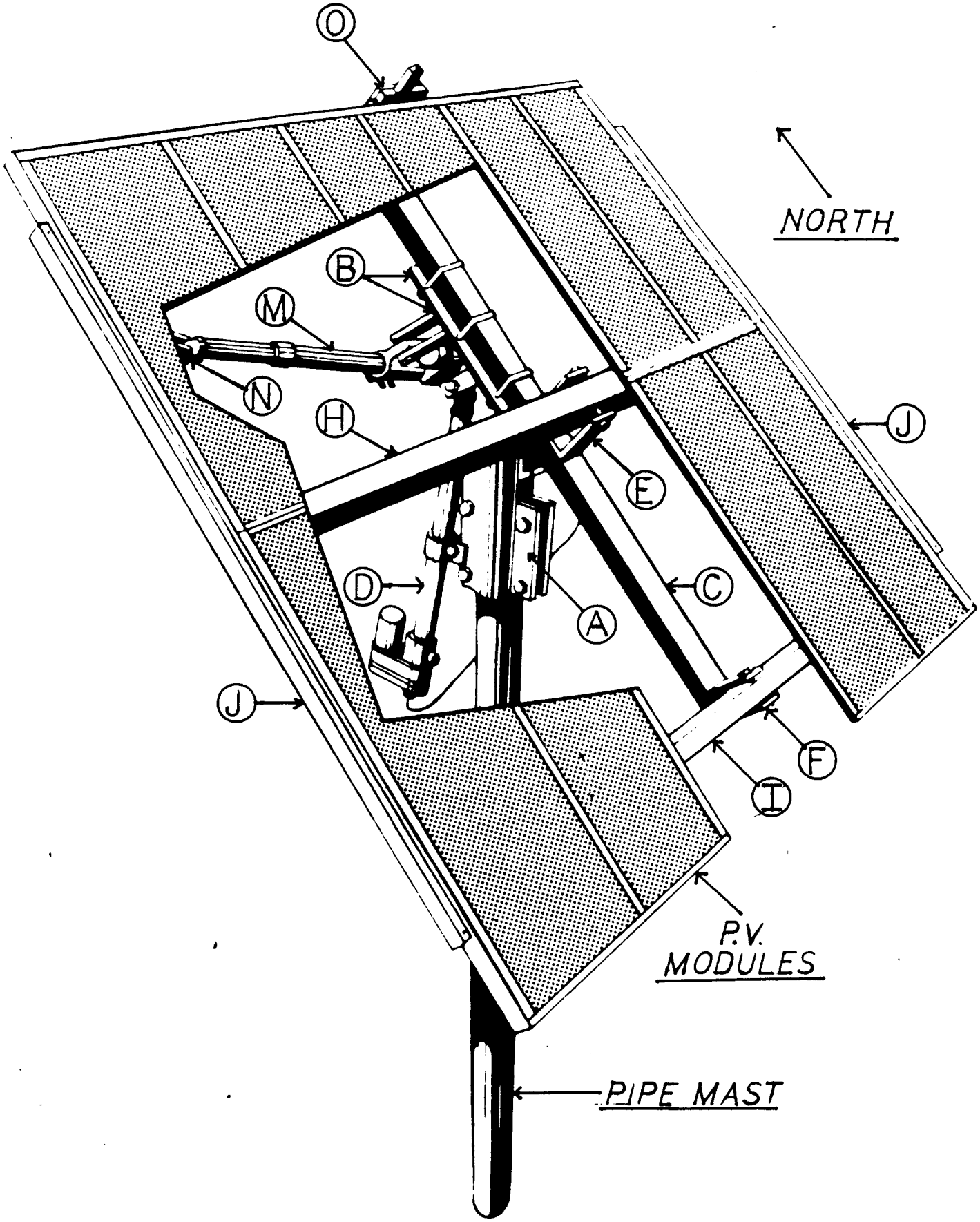

IDENTIFY THE COMPONENTS FROM THE LIST ON THE NEXT PAGE

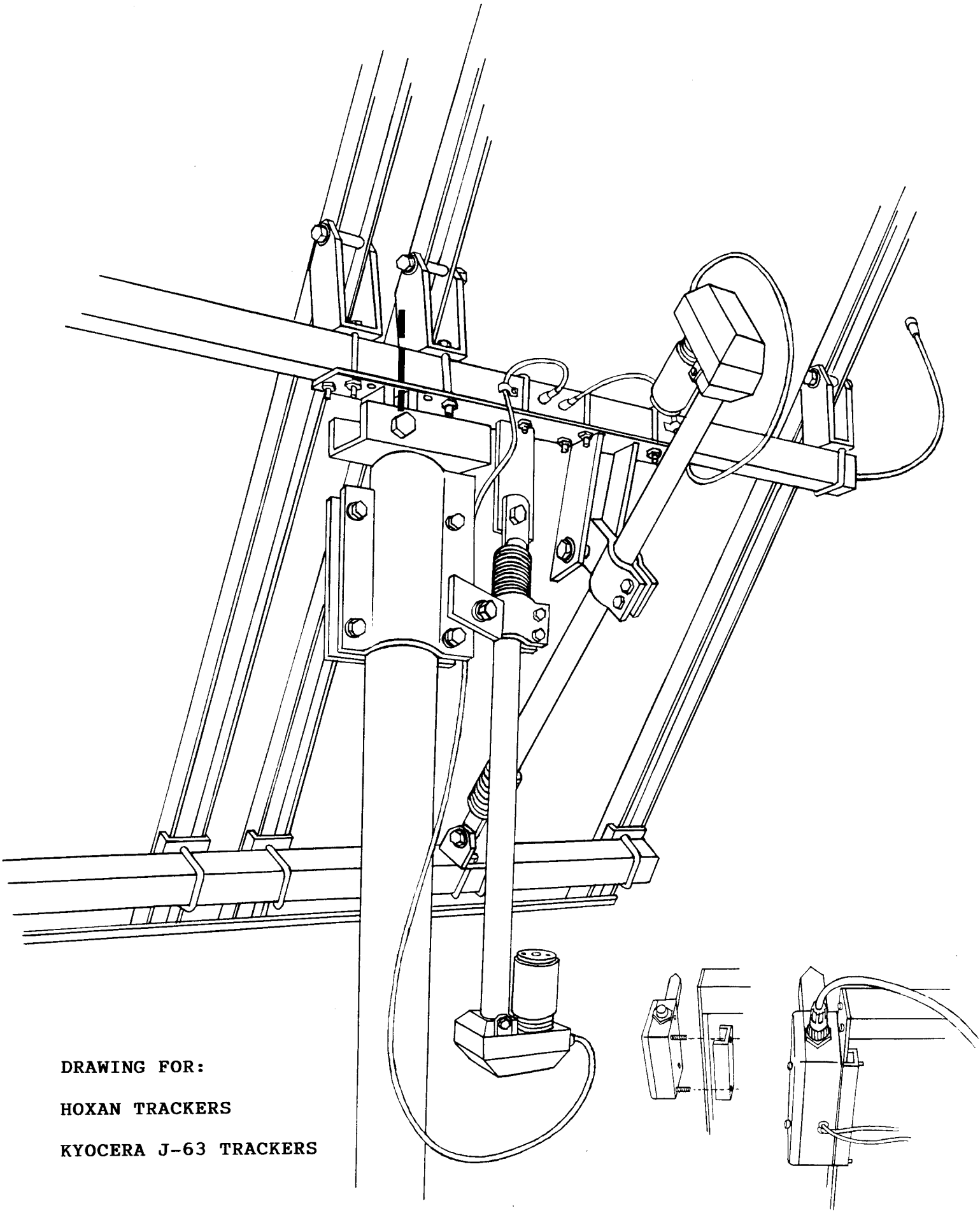

DRAWING FOR:

HOXAN TRACKERS

KYOCERA J-63 TRACKERS

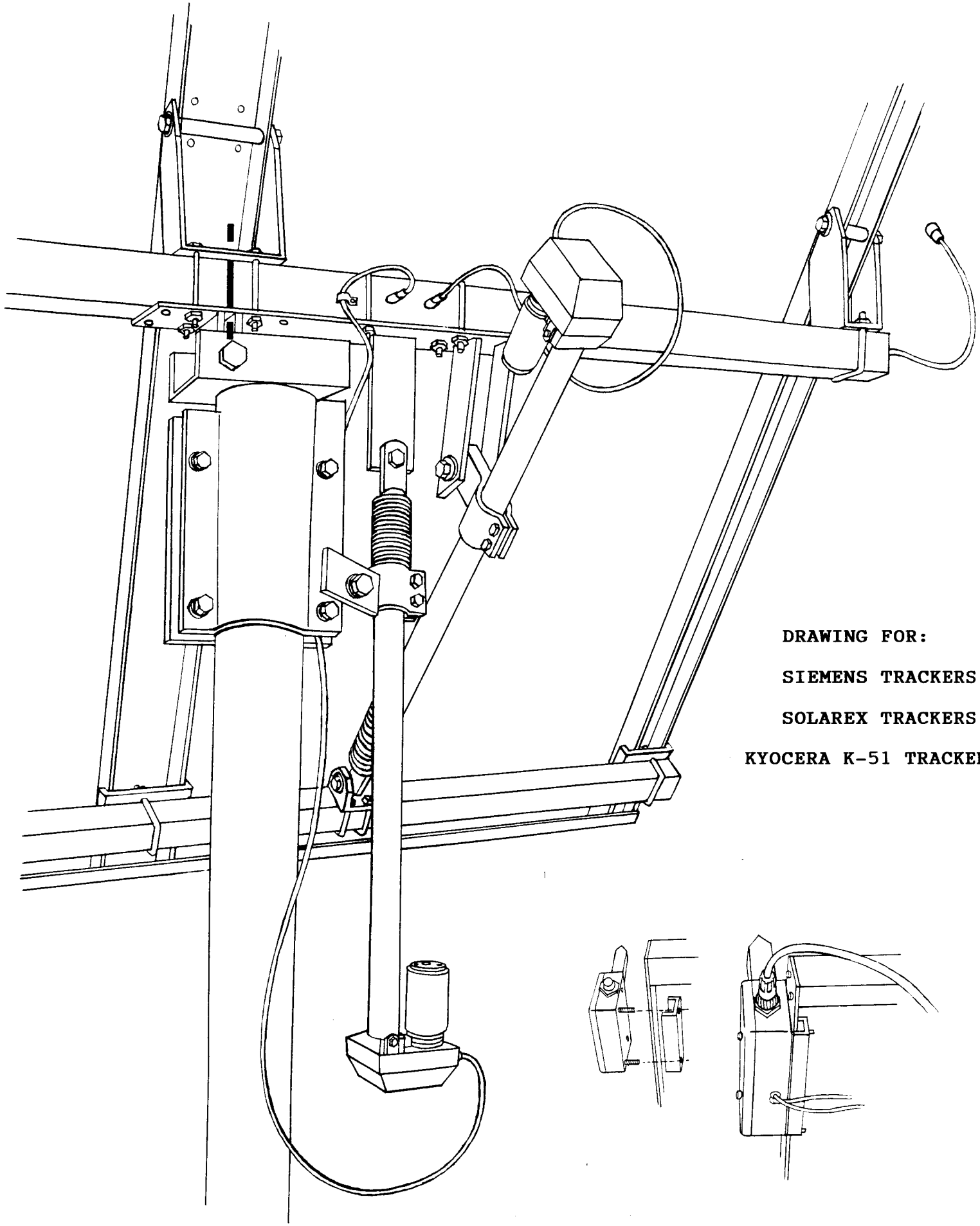
DRAWING FOR:
SIEMENS TRACKERS
SOLAREX TRACKERS
KYOCERA K-51 TRACKER

STEP BY STEP INSTALLATION INSTRUCTIONS:

1) Locate tracker position and using an auger or shovel dig the appropriate size hole for your tracker foundation depending upon tracker size, mast height and soil conditions. The foundation for the tracker is best designed by the installer due to the variations found in soil conditions. A rule of thumb is to have the same length of pipe in the ground as protruding out from the ground although this will typically be more than necessary. The diameter of the hole should be at least 2 feet.

2) Drill holes in bottom 3'to 4' of schedule 40 pipe. Insert rods or bolts in holes leaving approx. 3" protruding. This will eliminate the possibility of the pipe turning once cemented. Alternately, you may weld rods or angle to the pipe to achieve the same positive attachment in the cement foundation.

3) Set pipe in ground such that it is vertically level and with at least the minimum height protruding from ground. This will typically leave 2 feet of ground clearance from the PV array to the ground. The information for mast size and recommended minimum protruding height can be found on the data sheet enclosed for your tracker.

4) Pour cement around pipe until it completely fills the hole in the ground. Also pour some cement inside pipe to secure anchor bolts inserted in bottom of pipe. Make certain pipe is vertically level and allow cement to set for 24 hours.

5) Install masthead clamp (A) and main pivot attachment (B) on top of pipe mast with the arrow on pivot attachment pointing North.

6) Install the 2" square elevation support tube (C) onto the main pivot attachment (B) using the three U-bolts supplied. Be sure to align the black line to the center of the main pivot bolt. The two black rubber electrical connectors should be on the East side of the tube and the wire with the 4-pin connector should point to the North.

7) Using a compass, point the end of the elevation support tube opposite the protruding wire true south by rotating the masthead clamp (A) on the pipe mast and tighten the four masthead clamp bolts. These bolts should be tightened securely. Note: True south differs from magnetic south depending upon geographic location. Drill a 3/8" hole in the pipe mast corresponding to the hole in the side of the masthead clamp. Insert the 3/8" roll pin with a hammer. This will insure a secure installation of the masthead clamp.

9) Install the elevation actuator (D) (shorter of two) by its tube mount bearing into the masthead clamp tabs using the 1/2"

bolt lock washer and nut as shown in the drawing.

10) Attach the eyelet end of elevation actuator (D) to the single tab of the main pivot attachment using the 1/2" bolt, lock washer and nut.

11) Feed the elevation actuator (D) cable underneath the two masthead clamp bolts and plug the connector into the closest mating connector on the elevation support tube. There are arrows on the connectors to facilitate proper alignment. Connectors can be mated easier if you first wet the rubber to reduce friction. Also attach the cable strain relief clamp over the wire to secure the elevation support tube.

12) Install the center azimuth pivot bracket (E) over the center of the elevation tube and secure to the main pivot attachment using the four bolts supplied with the azimuth pivot bracket. The four bolts fit around the elevation tube and fit into the four corresponding holes on the main pivot attachment.

13) Loosely mount the end azimuth pivot brackets (F) over the elevation tube (C) on the North and South ends with the U-bolts supplied.

14) Install the center azimuth strut (H) into the center azimuth pivot bracket (E) using the 3/8" bolt attached to the pivot bracket. The bolt goes through the bushings in the center of the strut. Make sure to orient the furthest flat aluminum pieces on bottom of strut towards the West. The strut should have a West arrow marked on them.

15) Install the End azimuth struts (I) in the end azimuth pivot brackets (F) in the same manner making sure that the West arrow markings point West.

16) Install the end cap channels (J) over the ends of all three azimuth struts (H,I). These channels are easily installed using a rubber mallet to fit the legs of the channel over the ends of the azimuth struts. Line up the two holes on each strut with the holes in the end cap channel. When both of these end cap channels are installed and the holes are lined up, this will set the appropriate spacing of the frame. You may now insert the bolts in these holes along with the lock washers and nuts. Hand tighten at this time only.

17) Install the loose U-bolts (L) into the flats on the bottom of the azimuth struts. Some models will have 3 flats while others will have 6 flats. You should have the same number of loose U-bolts as there are flats on the azimuth struts.

18) Slide the cross support tube(s) (K) across the azimuth struts into the U-bolts that you just attached to the flats.

19) At this time everything above the elevation tube (C) should be loosely mounted to allow the modules the square up the frame. Insert the tube mount bracket (near motor end) of the azimuth actuator (M) into the two tabs protruding from the main pivot attachment (B). The long end of the actuator should point west as shown in drawing.

20) Install the azimuth actuator eyelet bracket (N) onto the west cross support tube (K) with the two U-bolts. Be sure that the eyelet bracket is installed with the two tabs pointing TOWARDS THE OTHER ACTUATOR. It is a common mistake to point these tabs at the ground. Refer to drawing to check for proper orientation. This bracket should be placed along the tube so that the azimuth actuator is parallel to the center azimuth strut. This will insure that no side loading of the actuator occurs.

21) You may now rotate the tracker to a flat position for module mounting. To rotate tracker:
First: Disconnect the rubber plug on the elevation tube which runs the elevation actuator.
Second: Take cover off control box and plug the battery into the circuit board. This is a red connector which plugs into the white two pin receptacle on the circuit board.
Third: Connect the controller to the four pin connector protruding from the end of the elevation tube. While looking at the circuit board, with the gray shadepole pointing up, place your finger over the left sensor and expose the opposite sensor to the sun. The frame should begin to move East. Continue until the frame is parallel to the ground and in the optimum position to mount the modules. Then un-plug the controller from the four pin connector.
NOTE: If LED on bottom of controller turns red, this means the internal battery pack is charge is low and you must connect the controller to a solar panel to provide power to move the array. (See controller spec sheet on last page of instructions.

22) Mount the PV modules to framework. Modules are mounted using only 4 mounting holes per module. The modules are configured as two rows of vertical modules. When mounted correctly, the modules will overhang on the North and South azimuth struts. (See Drawing) On Solarex trackers the junction boxes must be on the North and south ends of the array.

23) You may now tighten all the tracker frame bolts including all U-bolts. It is good practice to check all bolts at this time.
You may also connect the actuator electrical connectors to the elevation tube. There are strain relief clamps which must be attached to the wires as well (See drawing).

24) Install the control box (O) onto the North edge of the module just East of center, using the controller clamp and screws

provided. Be certain the internal battery pack is connected to the control board. You may now install the cover on the box be sure to tighten the four cover screws to prevent water leakage into control box. If your tracker has the optional 1 watt module, clamp the small module to the next module West of center in the same manner as the control box.

25) If your tracker does not have the optional 1 watt panel, connect the red lead of the control box to the positive terminal of the module it is mounted on and connect the black wire to the negative terminal OF THE SAME MODULE. DO NOT CONNECT THE RED AND BLACK WIRES TO THE OUTPUT OF TWO SEPARATE MODULES, DAMAGE TO THE CONTROLLER MAY RESULT. Be certain the red and black wires are clear from the pivot points and will not get damaged from movement of the tracker. The controller will use approximately 1/2 watt of power, during daylight hours, to both move the array and charge the internal ni-cad battery pack.

26) Connect the 4 pin connector to the control box. This connector should be locked into position by rotating the outer ring of connector. The tracker should begin move. Be sure to keep fingers and other valuable parts away from pivot joints at all times.

<u>PRE-OPERATION CHECKLIST:</u> Please follow instructions to insure proper tracker operation after installation.

1) Be sure to connect control box battery to the circuit board and connect the red and black input leads to the same PV module.

2) The actuators have integral limit switches which are set to stop the retraction and extension of the actuator so that the frame does not come in contact with the pivot brackets. Limit switches are factory set but still should be checked after installation.

TO CHECK THE AZIMUTH (EAST/WEST) ACTUATOR STROKE RANGE AND WIRE SERVICE LOOPS:
This is accomplished by covering the West sensor with black electrical tape which will drive the tracker to its extreme East position. When in the extreme east position check inside the azimuth pivot brackets to be sure the frame is not in contact with the base of the pivot brackets. If contact occurs, loosen and slide the tube mount clamp on the actuator by rotating the array so that the frame no longer contacts the base of the pivot brackets and re-tighten the clamp. Also check that the array output service wiring is long enough.

Now remove the tape from the West sensor and place it on the East sensor, this will drive the tracker to the extreme West position. Again check to be sure that the azimuth struts do not come in contact with the base of the pivot brackets. Also check that the

array output service wiring loop is long enough when in the extreme West position. If the frame contacts the base of the pivot brackets in this position this can be adjusted by setting the limit switch cam inside the rear actuator housing. This procedure is described in the actuator manufacturer's pamphlet attached to these documents. Remove the tape from the sensor.

TO CHECK THE ELEVATION ACTUATOR STROKE RANGE:
Use the same procedure as in the azimuth axis. Check the wiring service loops as well. Remove the electrical tape from the sensors.

FOLLOWING THIS PROCEDURE WILL INSURE THAT THE TRACKER WILL PERFORM CORRECTLY.

GENERAL OPERATION:
The tracker will begin tracking the sun on both axis. It will automatically sense sunset and return east every evening to be ready for the next days energy production. No maintenance except periodic visual inspection of the components and anchor points are required. The ni-cad battery pack internal to the controller should be replaced every 5-7 years. It is also recommended that grease be applied to the tube mount bearings on the actuators periodically. You will know that the internal battery pack has expired when the array returns east in late morning or early afternoon instead of in the evening.

THE WATTSUN CORPORATION LIMITED 10 YEAR WARRANTY

The Wattsun solar tracker is warranted by Array Technologies, Inc. to the original purchaser against defects in workmanship or materials under normal use for the following:

Controller box and aluminum tracker frame - 10 years excluding ni-cad battery.
All other components, including linear actuators - 2 years from date of purchase.

There are no warranties which extend beyond the description on the face hereof. Any other warranties, express or implied, including warranties of merchantability, are excluded.

In the event of a defect sole remedies shall be either product replacement or repair or refund of purchase price, at the sole discretion of the manufacturer. Manufacturer shall not be responsible for any incidental or consequential damages.

TRACKING CONTROLLER SPECIFICATIONS

The Wattsun tracker controller is equipped with three 5 X 20mm fuses. The one nearest the battery pack protects the battery charge circuit and is a 1.5 amp fast blow fuse. The two nearest the four pin connector protects the actuator drive circuit. These are 2 amp slo-blow fuses. The top fuse controls the elevation drive while the lower fuse controls the azimuth drive and logic circuitry. If the elevation fuse blows, the azimuth drive will continue to operate. If the azimuth fuse blows the tracker will stop tracking on both axis. If fuses continue to blow you may increase the amperage rating of the two drive fuses to 3 amps. Two extra fuses are stored to the left of the battery pack.

The controller is equipped with a low voltage detection/disable circuit. The white LED at the bottom of the controller will turn red if the internal battery pack reaches a low voltage condition. The tracker will cease to operate when the LED is red. All available energy will be used to re-charge the battery pack. Once sufficient charge is attained the tracker will resume operation. This may only occur once or twice per year. This is a normal operating mode of the tracking system. If this occurs very frequently, then the array voltage is operating below 12 volts and the PV system should be re-evaluated.

Controller input voltage during daylight hours should be between 12 and 26 volts.

OPTIONAL 1 WATT PANEL OPERATION:
The controller may also be operated from a small PV (1 watt) panel without any electrical connection to the main PV array.
The benefit of this option is to isolate the tracking system from the rest of the PV system. This panel may be purchased from the Arrat Technologies and includes mounting clamp and hardware.
For input connection of module in the field, connect the positive terminal of the module to the third input terminal and the negative to the second input terminal. When using this module there will be no connection to the first input terminal on the control board.

Conversely, when connected directly to the PV array the first terminal is the positive input and the second terminal is the negative input.