IRONRIDGE

End Clamp

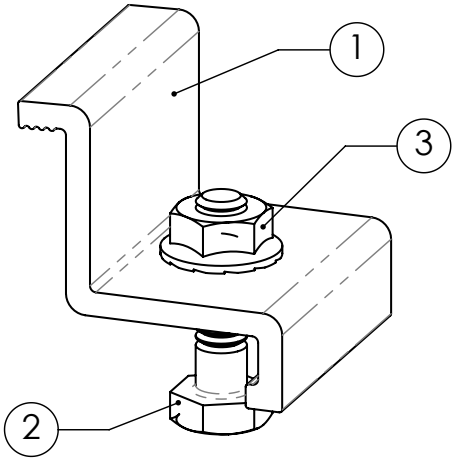

KIT, 4 PCS, END CLAMP

Item Number	Component	Qty in Kit
1	Clamp, End	4
2	Bolt, 1/4-20 X 1.00	4
3	Nut, Flange Hex 1/4-20 SST	4

TABLE 1: END CLAMP PART NUMBERS AND HEIGHT

MILL PART NUMBER	BLACK PART NUMBER	HEIGHT "X" in [mm]	ALLOWABLE MODULE THICKNESS in [mm]
29-7000-125	29-7000-125B	1.25 [32]	1.22 - 1.28 [31.0 - 32.5]
29-7000-130	29-7000-130B	1.30 [33]	1.28 - 1.32 [32.5 - 33.5]
29-7000-134	29-7000-134B	1.34 [34]	1.31 - 1.37 [33.3 - 34.8]
29-7000-224	29-7000-224B	1.41 [36]	1.37 - 1.45 [34.8 - 36.8]
29-7000-150	29-7000-150B	1.50 [38]	1.48 - 1.46 [37.5 - 38.5]
29-7000-157	29-7000-157B	1.57 [40]	1.53 - 1.61 [39.0 - 41.0]
29-7000-165	29-7000-165B	1.65 [42]	1.62 - 1.68 [41.1 - 42.7]
29-7000-171	29-7000-171B	1.71 [43]	1.68 - 1.74 [42.7 - 44.2]
29-7000-214	29-7000-214B	1.81 [46]	1.77 - 1.85 [45.0 - 47.0]
29-7000-187	29-7000-187B	1.875 [48]	1.84 - 1.90 [46.7 - 48.3]
29-7000-204	29-7000-204B	1.97 [50]	1.93 - 2.01 [49.0 - 51.1]
29-7000-230	29-7000-230B	2.30 [58]	2.26 - 2.32 [57.4 - 58.9]

1) Clamp, End

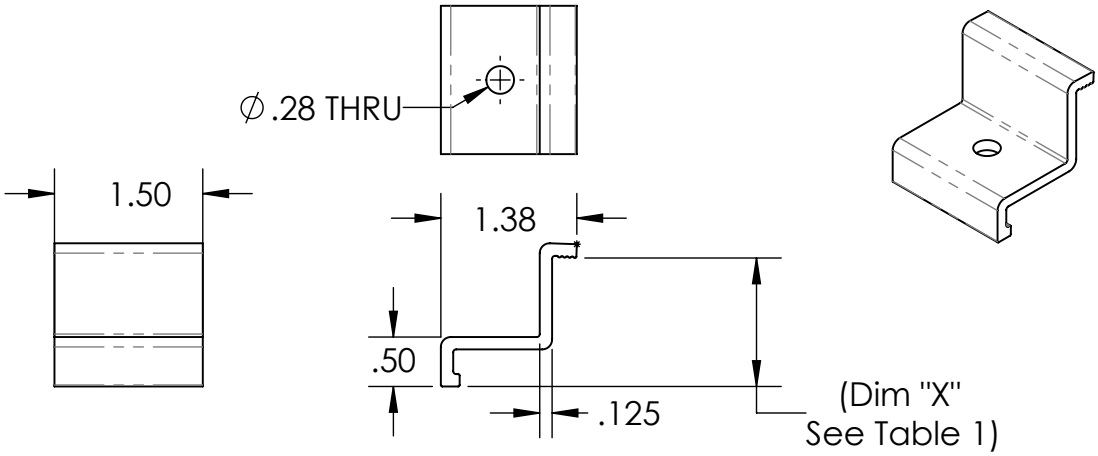

Property	Value
Material	6000-Series Aluminum
Finish	See Table1 (Mill / Black)

2) BOLT, 1/4-20 X 1.00" HEX CS SST

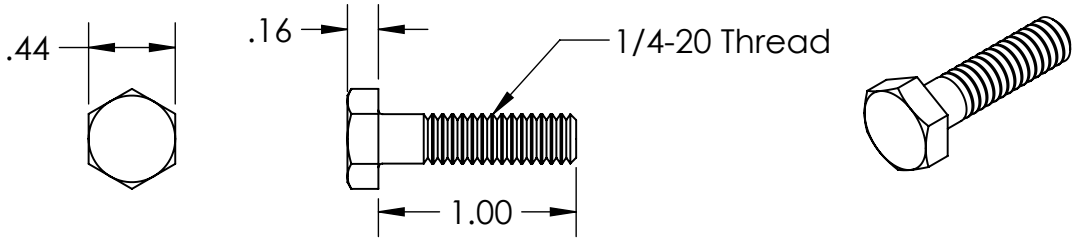

Property	Value
Material	300 Series Stainless Steel
Finish	See Table 1 (Mill / Black)

3) Nut, Flange Hex 1/4-20 SST

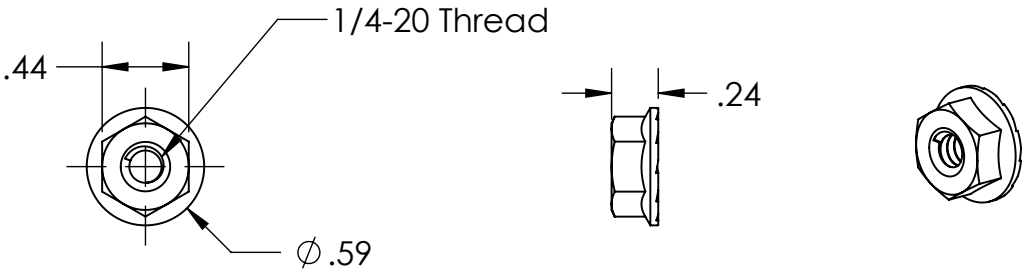

Property	Value
Material	300 Series Stainless Steel
Finish	See Table1 (Mill / Black)