# Installation and Owners Manual

## Load Transport Tilt Up Tower Kit

AEROMAG CORPORATION Version 5.0

**Distributed Worldwide by:**

AEROMAX CORPORATION "Revolution in the Wind"

| WARNING |
| --- |
| The AEROMAG Load Transport Tilt Up Tower Kit can be easily damaged by incorrect handling, assembly, installation, or use. Furthermore, installation, erection, and maintenance of the Tower Kit involves work with electrical components, which can be extremely hazardous. Prior to assembly, installation, erection or maintenance of the AEROMAG Tower Kit, individuals must read and understand the information contained in this Owner's Manual as well as information provided by the manufacturers of other system components. Furthermore, designers and installers must be conversant with rules, regulations, and bylaws applicable to the installation.<br><br>**Failure to comply with this Owner's Manual will void the AEROMAG Warranty.** |

**Voice: 928-775-0085.**
**Toll-Free - 1-888-407-WIND**
**Fax: 928-775-0803**

**E-mail:** info@aeromag.com
**Internet:** www.smallwindturbines.com

# Disclaimer

This document is provided for information purposes only. AEROMAG Corporation makes no warranties, either expressed or implied, in this document. Information in this document is subject to change without notice.

It is the responsibility of the user to ensure that the AEROMAG Load Transport Tilt Up Tower Kit and all associated equipment are suitable for the intended purpose and installed in accordance with all applicable rules, regulations, bylaws, and codes. Policies governing the installation of wind turbines may vary dramatically from one jurisdiction to another and are beyond the control of AEROMAG Corporation. The entire risk for the use of, or results from, this document remains with the user.

Complying with all applicable copyright laws is the responsibility of the user. Without limiting the rights under copyright, no part of this document may be reproduced, introduced into or stored in a retrieval system, or transmitted in any form, by any means (electronic, digital, mechanical, photocopying, recording, or otherwise) or for any purpose, without the expressed written permission of AEROMAG Corporation.

AEROMAG Corporation products may have patents, patent applications, trademarks, copyrights, and/ or other intellectual property rights covering subject matter in this document. Except as expressly written, the furnishing of this document does not give the owners of AEROMAG Load Transport Tilt Up Tower Kit or anyone installing or using this product any license to these patents, trademarks, copyrights, or other intellectual property.



AEROMAG is continually striving to improve this Manual and greatly appreciates feedback from LAKOTA users. Please forward your comments, questions and criticisms to info@aeromag.com or contact our office directly at 928-775-0085 or 1-888-407-WIND.

A copy of this Manual is available in a digital version for $8.00 including GST. To order a CD, contact AEROMAG, 928-775-0085, 1-888-407-WIND or info@aeromag.com

# Table of Contents

# Introduction

Thank you, for choosing a tower kit from the *AEROMAG Load Transport Tilt Tower Kit* family. This tower kit has been designed for greater safety and ease of installation utilizing superior components combined with the finest quality hardware. Conventional pipe couplers assemblies in the main tower structure have been eliminated in favor of compression couplers that utilize smoother superior structural qualities without relying upon threads that are rough and difficult for the laymen to install. This tower kit will allow you to fully install and operate a guyed tower mounted wind turbine generator with as little effort as possible, while delivering reliable structural stability. This kit combined with the comprehensive use, care and installation manual will install in you the confidence to raise and lower your turbine whenever necessary.

# Specifications and Features

47 - Foot Tower Kits

- Tower Height - 42 feet (not including riser)
- Capable of mounting riser on top of tower
- Will withstand gusts exceeding 100 MPH
- 3 Compression Couplers for mast assembly
- Pivot base with electric conduit adapters
- Gin Pole receptacle
- Slip-T assembly for ease in lowering and raising tower
- 1/4 inch aircraft grade tension cable

25 - Foot Tower Kits

- Tower Height - 21 feet (not including riser)
- Capable of mounting riser on top of tower
- Will withstand gusts exceeding 100 MPH
- 3 Compression Couplers for mast assembly
- Pivot base with electric conduit adapters
- Gin Pole receptacle
- Slip-T assembly for ease in lowering and raising tower
- 1/4 inch aircraft grade tension cable

## Warnings, Cautions and Notes

Installation, erection, and maintenance of the AEROMAG Load Transport Tower Kit involves the physical installation of the tower and work with various electrical systems and components, both of which can be extremely hazardous. Those who are unfamiliar with renewable energy systems or their installation should seek the assistance of professional tradesmen, most importantly a qualified Electrical Contractor, familiar with renewable energy systems and components. Specifically, installers must be familiar with battery management, high amperage DC circuitry, and local electrical codes. In all cases, prior to assembly, installation, erection, or maintenance of the AEROMAG Load Transport Tower Kit, individuals must read and understand the information contained in this Installation and Owner's Manual as well as information provided by the manufacturers of other components that will be incorporated in the overall system. Furthermore, designers and installers must be conversant with rules, regulations, and bylaws applicable to the installation.

Throughout this manual, the terms WARNING, CAUTION, and NOTE are used to highlight hazards or unsafe practices or significant points worthy of emphasis. These terms are defined as follows:

| WARNING |
| --- |
| Hazards or unsafe practices that could cause serious injury or death. |

| CAUTION |
| --- |
| Hazards or unsafe practices that could damage the wind turbine and system components. |

| NOTE |
| --- |
| Notes that will make assembly or operation easier and less prone to error or may avoid poor performance due to improper installation or adjustment. |

## Safety Considerations - A common Sense Approach

Common sense and caution should be used in assembling and installing the LAKOTA wind turbine. Some appropriate safety considerations are:

- ✓ Plan your work before doing it. Read this entire manual at least once first.
- ✓ Work systematically in the order recommended. Don't rush.
- ✓ Keep your tools and equipment organized to avoid making mistakes.
- ✓ Wearing thin leather or rubber palm gloves may avoid minor cuts and pinches.
- ✓ Wear sturdy shoes or steel-toe work boots and construction hat in case something heavy falls.
- ✓ Test for voltage present on electrical connections with a multi-meter before touching or connecting them.

## Package contents and Inventory

The following paragraphs provide a detailed list of components included with the AEROMAG Load Transport Tilt Tower. Immediately upon receipt of the system, take a few moments to verify that all of the components were included in the shipment. In the unlikely event that one or more items was omitted, lost, or damaged during shipping, contact your Authorized AEROMAG Dealer. Have the model number, serial number, and original purchase receipt available. Refer to the Identification Section (write these key numbers on page 9) for additional information regarding the model and serial numbers.

**Documentation**

- 1 Aeromag Load Transport Tower Kit Owner's Manual (this document
- 1 Product Registration Card for the tower Kit
- 1 Warranty Card - Must be returned for warranty Validation

**Tower Base Assembly - Gin Pole Attachment**

- 1 Base Plate - 4.5" x 12" x 12"
- 2 Coupler Base
- 1 Tilt Receptacle
- 1 Tilt Coupler Base
- 1 Tilt Receptacle Dampner
- 1 Swivel Bolt Sleeve
- 1 Conduit Plate
- 2 Gin Pole Stabilizer
- 1 T-Connector - 2.5" D - 3.25" Height
- 1 Pipe - 1.5" D - 12" Length
- 1 5/8" Bolt and Nut

**Compression Couplers**

**25 foot kit - includes 1**
**47 foot kit - includes 2**

- 2 Compression Coupler Rings
- 1 Compression Coupler Space Hub
- 2 Compression Coupler Cap

**Anchors**

- 4 Tilt Base anchor (J-Bolts)
- 4 Guy Wire Anchors (U-Anchors)
- 48 Drywall Screws

**Guy Wires**

- 1 Galvanized steel or stainless steel Wire Cable
- 12 Cable Clamps
- 8 Cable Thimbles

## Not included in Kit

The following items are not included in the AEROMAG Load Transport Tower Kit, and must be purchased separately. Please pay careful attention to the specifications for each of these parts. These items must be purchased according to these exact specifications, to ensure proper installation and reliability of the Tower Kit.

### Tower Mast

The tower mast must be obtained from your local steel tubing supplier. Good sources for SS20 are fencing companies. You will need to purchase Structural Steel tubing (SS20) sections, 21ft long with a 2 3/8" outer diameter. (Some regions may have metric or slightly different lengths). Refer to the chart below for the quantity of pipe required for the particular kit that you have purchased.

**CAUTION**

Structural Steel Tubing (SS20) is the preferred material for tower construction. The SS20 is very strong, light, and does not possess threads on the ends. Water pipe has been used in the past for tower construction, but is not recommended. Water pipe is heavier, less strong, thus acting like a structural "wet noodle". The threads in water pipe can also increase the likelihood of tower failure under extreme loads. Water pipe should only be used in the case that structural steel tubing (SS20) is not available

**WARNING**

Make sure the tubing you purchase has an outer diameter of exactly 2 ⅜ inches (6.0325 cm). This is extremely important due to the tight tolerance of the compression couplers.

### Gin Pole

The gin pole must also be purchased when you purchase the Tower mast. Each tower kit will require one 21-foot length of Structural Steel Tubing (SS20 or SS40), 2 3/8" outer diameter.

**Required Pipe Purchasing ***

| Tower Kit | Total Tower Height | 21 ' sections Tower Mast | 21' sections Gin Pole | Total 21' Sections |
|---|---|---|---|---|
| **TOW 2-25 A**<br>**TOW 2-25 W** | 25 ft | 1 | 1 | **2** |
| **TOW 2-47 A**<br>**TOW 2-47 W** | 47 ft | 2 | 1 | **3** |
| **TOW 2-72 A**<br>**TOW 2-72 W** | 72 ft | 3 | 1 | **4** |
| ***In addition, every tower requires a mast riser specified by your manufacturer's turbine manual** | | | | |

## Tower Riser

The riser is needed to stand off clearance between the wind turbine blades and the guy wires that support the tower. Most tower manufacturers call for a tower riser constructed from water pipe. Water pipe sections come threaded on both ends, but the riser needs to be completely thread-free on both ends. To make a riser, simply cut a middle section from a length of water pipe. To save money, check with your pipe supplier for a remnant. The turbine can never be mounted on an end that is threaded, unless the wind turbine manufacturer requires such a coupling. A longer than required mast riser increases the risk of structural failure caused by increased stress concentration at the coupler joint at the bottom end of the riser section. Please refer to your wind turbine manufacturer's manual for the correct mast riser length and specification.

| NOTE |
| --- |
| If you are installing an AEROMAX Lakota 900Watt Wind Turbine, you will need to buy a length of Schedule 40 Water Pipe. The outer diameter must be 2 3/8 inch, and the inner diameter must be 2 1/8 inch. |

| CAUTION |
| --- |
| If the mast riser is to be cut with a pipe cutter, make sure the inside of the pipe is properly reamed. Pipe cutters can leave a flange inside the pipe that is extremely difficult to file. Cutting into the pipe in smaller increments on the final turns will help reduce this flange. A reaming attachment is built in to most threading/cutting machines, and should be used to ream the inside of the pipe. The ream is very important, as the turbine may be configured to mount inside the pipe to a close tolerance. Taking you turbine head to the pipe cutter for a test fitting is always a good idea. If the pipe has been cut with a saw, it is usually easy to dress the inside with a metal file. |

## Concrete

In most permanent installations, the tower anchors are made of ready-mix concrete and are mixed and poured on site. Each anchor pad must weigh at least 700 lbs for high wind sites and should be recessed into the ground. Each anchor pad will use at least seven bags of 90 lb bags of ready-mix (depending on size), while the base pad uses about five bags. Be sure to review the complete details in the anchor and pad section on page 15.

# Planning your Project

Installation of the AEROMAG Load Transport Tilt Tower is a substantial undertaking worthy of considerable planning prior to assembly or construction of towers. For both practical and economic reasons, it is important to carefully assess your specific requirements and to design and size your renewable energy system accordingly. The following paragraphs highlight some considerations when planning your project.

## Site Selection

The two primary requirements for optimum WTG performance are relatively high average wind speed and relatively low wind turbulence. The power available in the wind is proportionate to the speed of the wind cubed. Therefore a comparatively small increase in average wind speed can make a dramatic difference in power production. If a site has high turbulence it will deliver less energy than a site with relatively the same wind speed but lower turbulence. A turbine located in a turbulent wind regime will also incur higher levels of stress and fatigue resulting in higher WTG maintenance than a low turbulence site.

When selecting a site for a wind turbine there are three factors that must be considered. In order of importance they are: Topography, Barriers, and Surface Roughness. In addition, wind turbines located atop taller towers encounter less turbulence, harvest substantially more energy annually, and require less maintenance than units that have harvested the same energy values from turbulent flows.

## Topography

As a general rule, a WTG tower should be located at the highest elevated land point on your site that is practical to access. During the evening, as the air cools, it tends to sink into low-lying areas and lie still until the morning sun warms it again. Because of this effect, lower areas tend to have very little wind at night. In some sites the same effect can occur due to winter cooling as well. This phenomenon is usually responsible for lower levels of energy in the wintertime. High elevation site selection will help compensate for this effect. The figure below illustrates the effects of elevation on turbulence and wind speed.

There are also cases where the highest land point available is not the best WTG site. The highest point may be inaccessible or inconvenient due to vegetation or rough terrain. The high point may also be too far away for efficient power transmission or may expose the WTG to severe icing conditions. In addition, the highest point may not even always have the highest wind speed due to the micro dynamics of the site or the effects of terrain in the area around the site. All these considerations must be taken into account when choosing a site.

In addition to elevation, there are a number of topographical effects that can increase local wind speed by concentrating or funneling wind. Ridges or cliffs perpendicular to the prevailing wind, a valley parallel to the prevailing wind, or a pass or saddle perpendicular to the wind are some common geographic features that concentrate wind.

The only sure way to find the point with largest wind speed is to simultaneously observe the wind at various points. You can get a good idea of relative wind speeds by informal experience, or by

examining local vegetation for signs of wind damage. Wind measuring devices, such as an anemometer, can also be purchased or borrowed from some government institutions.
The turbulence associated with a particular site must also be taken into account. A good way to observe the turbulence at a potential site is to fly a kite and watch the behavior of a series of 4 ribbons tied to the kite string on a moderately windy and sunny day. If the ribbons are flapping heavily and moving erratically the site has high turbulence. If all the ribbons are flying in the same direction with moderate flapping, the site has low turbulence.

## Barriers

Barriers to the smooth flow of the wind (buildings, trees, etc.) generate wakes that may extend far downward of the barrier. These wakes are areas of decreased wind speed and potentially damaging turbulence. For instance, locating a turbine directly behind the tree shown in the figure below would result in low wind speeds and perhaps violent turbulence. Likewise, winds at the base of the hill shown are much more turbulent than the fast moving winds near the peak.

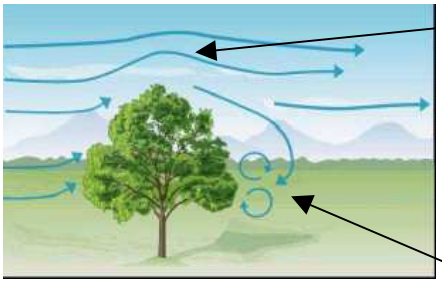

**Smooth, fast Winds**

**Turbulent Winds**

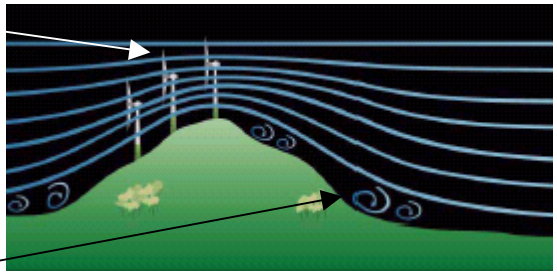

## Surface Roughness

Wind flow is slowed by friction with the ground surface. Smoother ground will result in less turbulent, faster wind. If the terrain is rough, a taller tower will be needed to compensate. Assuming 30mph (48.3 km/h) winds and a 500 Watt generator on a 20 ft (6.1m) tower, the following chart shows surface effects on power output.

| Power loss with a 500 W Generator on various surfaces | | |
|---|---|---|
| **Surface Type** | **Output** | **Loss** |
| Smooth (sand or water) | 450 watts | 50 watts |
| Medium (grass or crops) | 400 watts | 100 watts |
| Rough (trees or houses) | 350 watts | 150 watts |

## Two Rules of Thumb:

| NOTE |
|---|
| **1)** A tower immediately down wind of a building should be at least twice the height of the building. |
| **2)** A tower should be 25 feet (7.62 m) higher than the highest barrier within a 500 foot (152.4 m) radius. |

## Tools Required

The following tools will be required to complete the system check, assemble, and install the AEROMAG Load Transport Tower Kit. This list does not include additional tools that may be required for assembly of the WTG or installation of system components provided by other manufacturers; please refer to your turbine manual and information provided by the component manufacturers for additional requirements.

| CAUTION |
| --- |
| This tools list does not include tools needed for constructing the concrete anchors. The anchors need to be placed at least 10-14 days prior to tower erection, and the concrete needs to be allowed to fully dry. For more information on anchor construction, see page 14 |

- 2 cordless drills with 15/16" socket and drive
- 1 sharp semi-round (rough) metal file
- 1 sharp cable cutter or side grinder with carbide cutting wheel
- 60 feet nylon rope
- Pipe thread compound
- ½ inch heavy duty electrical tape
- Allen Wrenches and crescent wrenches for compression couplers
- Quality leather work gloves
- Safety glasses or goggles
- Hard hats or safety helmets for tower erection

## Team Effort

It is very important that you have a team of dedicated, alert workers helping to erect your tower. Many of the preliminary steps can be done with 2 people, but the latter portions of the tower erection (test lift, gin pole assembly, ect) will require 4 or 5 focused team members. When completing the steps detailed below, always confer with your team members to ensure that you are all on the same page and things are being done correctly. Effective communication will stop almost all safety hazards and eliminate possible damage to the tower kit.

## Assembly - The 11 Steps

In the paragraphs below, you will find detailed instructions on installing your AEROMAG Load Transport Tower Kit. Please follow all directions exactly. If you have any questions concerning specifics of the installation, please contact AEROMAG directly by calling 1-888-407-WIND

### STEP 1: Laying out the Tower Site

A: Tower center - base pad

The first step in installing this kit is to locate the tower's center or base pad location. From tower center, you will need to confirm that there is adequate space, free from any obstacles, for the anchors that will be located in four equidistant locations from this point. See the illustration below for visualization.

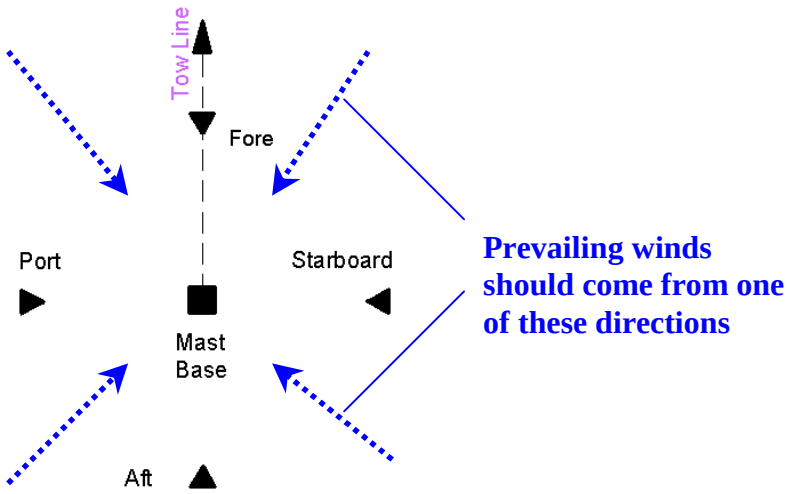


**Aerial View of the Tower Set-Up**

The area beyond the fore (tow) anchor is called the towpath. You need to confirm that the towline path is clear and free of any obstacles past the fore anchor for a distance of at least 50 feet for 47ft towers, and 30 feet for 27ft towers. Be sure that the anchor pad and towpath layout will also enable you to situate two of the anchors into the prevailing wind such that they carry the wind loads equally. If a winch is to be used you must be able to locate it safely beyond the point where the tower mast would fall.

B: Locate the anchor pads

Locating the tower anchor pad sites is simple once the tower center and towpath have been established. Be sure you have located the anchor pads so that the prevailing wind will load two of the guy wires equally.

From tower center measure 21 feet out to locate the center of the forward (fore) anchor pad. It is also referred to as the tow anchor because this pad will be used for the tow cable that comes from the tower mast, up over the gin pole and down through the anchor on its way to the tow vehicle or winch prior to erection. The end of the gin pole will also drop down to this point. This tow cable will become the forward guy wire(s) after final erection.

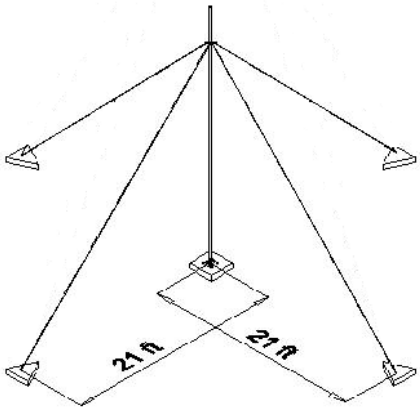


**25-Foot Tower**

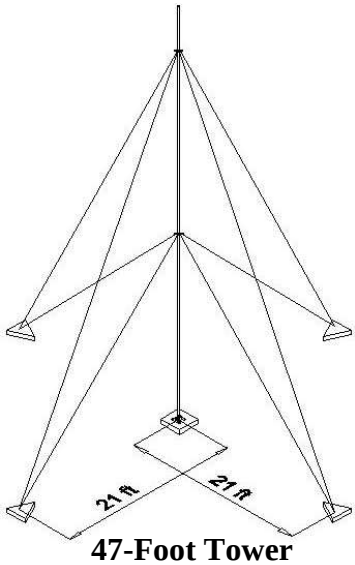


**47-Foot Tower**

| WARNING |
| --- |
| The Starboard and Port anchors must be level with the Tower Base anchor pad. Use a laser level or homemade surveying device to ensure the pads are on the same level. If these three pads are not all level, it could result in disastrous results when lifting and lowering the tower. For more information on sloped sites, see Appendix B on page 34 |

Locate the starboard anchor site by measuring 21 feet out from the starboard (right) side of tower center. Check to confirm that the starboard anchor is square, in relation to the fore anchor site by directly measuring the distance from the fore to the starboard anchor on centers. The measurement (hypotenuse) between these two points should be 29 feet, 8.5 inches. The same methodology can now be applied to locate the aft and port anchors. Also check that the port and starboard anchors are level with each other and the base pad.

| CAUTION |
| --- |
| If you have a significant slope to your site you will need to re-calculate the distances from anchor base out to the for and aft anchors as well as the corresponding cable lengths. See page 34 and Appendix B for details. |

## Step 2: Excavation

A good concrete form can be made using the following dimensions. These forms can be made with spare pieces of wood or standard Styrofoam boards available at most hardware stores. Use the measurements provided in the following illustrations to excavate your pad and anchor sites. These forms are great templates to mark your pad and anchor parameters.

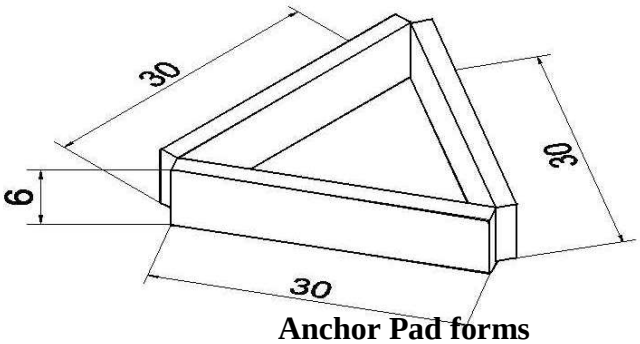


**Anchor Pad forms**

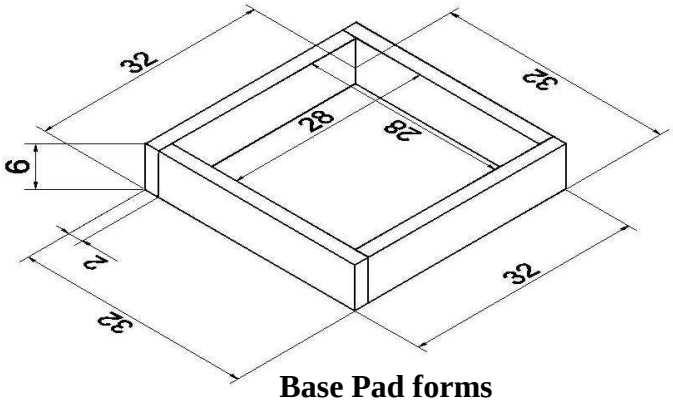


**Base Pad forms**

The constructed forms shown above will not hold enough concrete by themselves to support your future tower structure. It is imperative that you go at least 18 inches in diameter and 24 inches deep below the forms. This will make the total depth of the hole 30 inches. (Auger drill size is 18 inches and will be a circular cutout in the middle of the triangular pad).

| CAUTION |
| --- |
| All excavated anchor holes must be at least 18 inches in diameter and a total of 30 inches deep, including the depth of the forms. If the holes are not taken to at least this depth and width, it is very likely that the anchors could be pulled from the ground in high wind and result in catastrophic tower failure. |

When excavating, remember that deeper is better. Unfortunately, in many rocky locations, pads may need to be poured at ground level or perhaps be partially obstructed by rock protrusions. You can trim the foam to contour around a rock, provided that you can make up for the loss of mass near the edge with a deeper hole into the ground near the center of the shape.

When excavating the holes for your port and starboard anchors, remember that these two anchors must be level with one another, as well as the base anchor. If the anchor needs to protrude from the ground, or be recessed into the ground to make the three anchors level, take this into account when you are excavating this site.

Also if you are in an extreme high wind site, you will need to abandon the foam forms included and utilize the sono tube method. Sono tubes should be 12 inches in diameter, 4 feet long and set completely into the ground. The cardboard sono tubes should be available at your local building supply. A sono tube is always a great idea for the fore (tow) anchor which experiences the highest loads when tilting-up your tower. For more information on high wind sites, see Appendix A on page 33.

## Step 3: Pouring the anchor pads

Mix the concrete as prescribed on the concrete packaging. The dirt inside the excavated hole should be somewhat tamped down, to ensure that no air gaps will remain after the concrete is poured and the dirt settles. Pour the concrete into the excavated hole until it reaches the top. Place the pre-constructed forms on top of the poured concrete and finish filling the form to the rim of the form. Finish the surface of the anchor pad with a masonry trowel.

| CAUTION |
| --- |
| When pouring your anchors, make sure to remember the port, starboard, and base anchors must be all be level with one another. If the concrete anchors need to be recessed into the ground or raised above the ground, take this into account when making your forms and pouring your concrete. You may need to construct additional forms to create a protruded anchor. |

If the port and starboard anchors are not level, you may need to raise the concrete forms above the ground or recess them into the earth. The drawings below illustrate this method. Make sure to use a laser level (about $20) or another homemade surveying device (See the slope section in Appendix B on Page 34) to make sure these two anchor pads are level with each other and the base anchor pad. Aim the surveying device (or laser level) across the distance between the two anchors, and use a ruler to take a measurement between the top of the anchor and the intersection with the level line, and make adjustments as necessary.

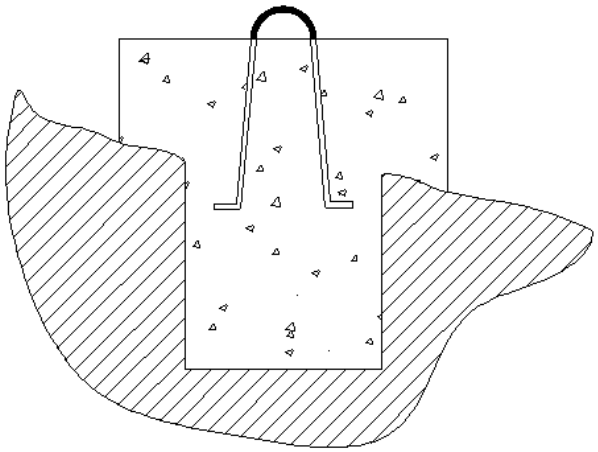

**Raised Anchor**

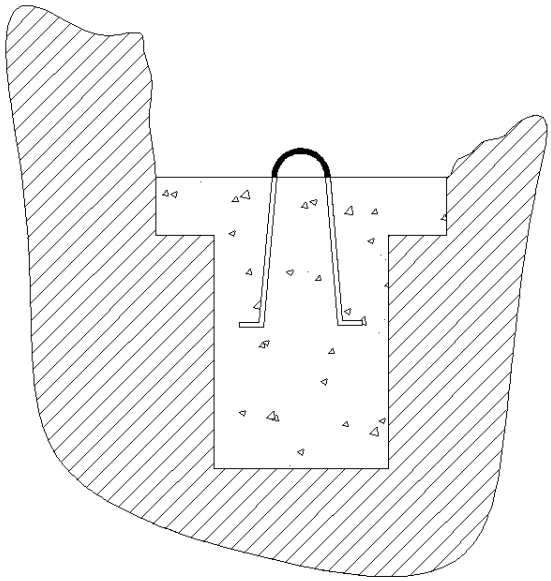

**Recessed Anchor**

If you are recessing your anchors into the ground, the forms are not necessary, but if you want to use them, make sure you leave enough room for them in the top of the hole. Take care not to kick dirt onto the drying concrete if you are using a recessed anchor.

The anchors require at least 700 pounds of concrete, so even if you are recessing your anchors into the ground, make sure the portion of the hole filled with concrete is at least 18 inches in diameter and at least 24 inches deep.

The re-bar anchor loops included within the kit are now set into the center of the wet concrete after tamping and surfacing. Softly press the re-bar anchor loops into place according to the following schematic. Never wait for the concrete to begin to thicken before setting the anchor loops. Be prepared to use span wise sticks (re-bar works great) to hold the anchor loops up at the right position while the concrete sets up. Never disturb or apply any form of load to the anchors during the cure stage, approximately 2 weeks. All of the submerged part of the re-bar needs to be cast into the concrete. In order to avoid rust and corrosion, never let the re-bar touch any earth. A rusty re-bar can expand with corrosion and crack an anchor or base pad.

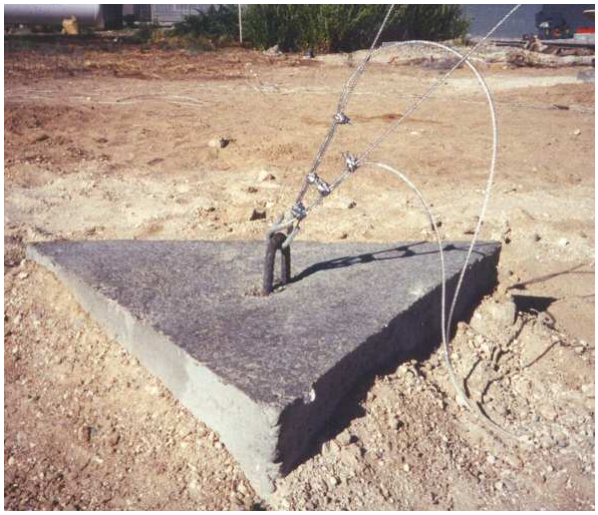

| WARNING |
| --- |
| Never compromise on the amount of concrete used to pour the anchors. Each anchor must weigh at least 700 lbs. In high wind sites such as with gusts up to 120 miles per hour, the vertical lift on the anchor pad will exceed 550 lbs in the vertical direction and 300 lbs in the horizontal direction. Using less than the prescribed amount of concrete can result in catastrophic tower failure and will void the AEROMAG warranty. |

**Alternative anchors.**

In many installations, we have seen installers take advantage of large rocks, boulders, trees or objects that are in just the right place to be utilized as an anchor. Be sure to take the necessary shielding measures to ensure that you do not damage a live tree. Always confirm that there is enough mass in the object to qualify it as an alternative anchor pad.

## Step 4: Setting the Mast Base

In order to avoid base bolt misalignment, a plywood template must be used to set the bolts into the concrete on the base anchor. Using a square piece of plywood, drill 4 holes through the plywood according to the following diagram:

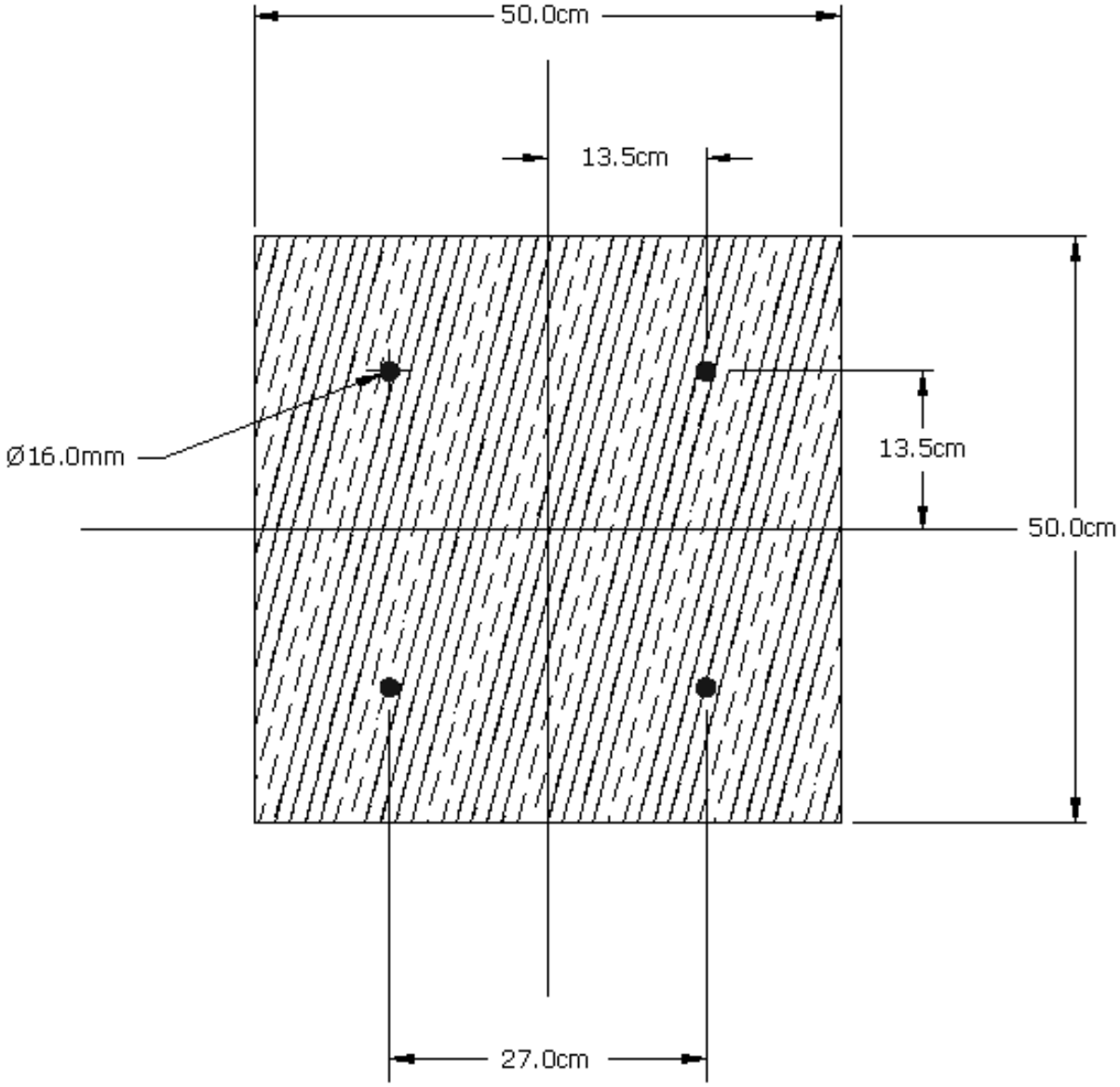


**Plywood Template for setting base plate**

The plywood square does not need to be exactly 0.5 m on each side. However, the plywood must be at least 40 cm (~1' 4") , but must not exceed 60 cm (~2 feet) on each side. The holes must be exactly 27 cm apart at right angles to each other. Before you drill the holes, hold the plywood board against the back of the base plate, to ensure the hole locations are aligned with the holes in the base plate. Drill the holes in the plywood with a 5/8" or 16 mm drill bit.

Insert the J-Bolts through the holes in the plywood and thread one washer and locknut onto the top side of the template, and two locknuts on the top side of the template, as shown in the two figures below. Tighten the bolts, and ensure the J-bolts are perpendicular to the plywood template. The anchor bolts should stick out approximately five inches below the bottom of the template, to ensure adequate penetration into the concrete.

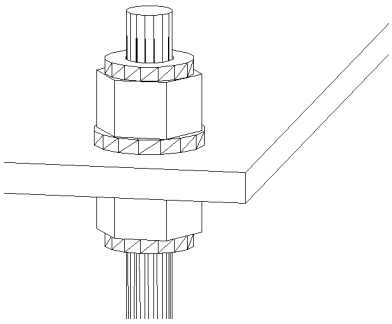

**Hex Nut and Washer Detail View**

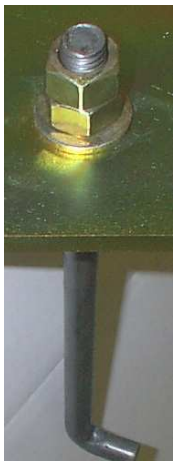

Pour the concrete into the excavated hole and the prepared base-pad form and let it settle. Immediately after the concrete is tamped and surfaced to satisfaction, gently put the plywood template, with the anchor bolts mounted, into the center of the wet concrete. Make sure the template does not sink into the concrete; it should just lie on the surface. Use a carpenter's level to ensure that the surface of the plywood is completely level.

| **CAUTION** |
| --- |
| The plate should be sitting completely level on the concrete pad. This is the foundation of your tower, if not properly leveled, it could increase the likelihood of catastrophic tower failure. |

All of the tower anchors should be somehow shielded from physical interference. Driving wooden stakes into the ground around the anchors and roping the area off with flags or caution tape is an effective method. The concrete must be allowed to dry completely undisturbed for at least 10-14 days before erecting the tower.

After the concrete base anchor has dried for at least 10-14 days, you can mount the base plate to the installed J-bolts. Remove the nuts and washer on the top of the plywood sheet, and carefully remove the plywood from the concrete slab. The J-Bolts should remain firmly set in the concrete, and the bottom washer and nut should be partially embedded within the concrete. Slide the base plate over the protruding portions of the J-bolts, and tighten the top 4 nuts.

## Step 5: Lay out the Tower Mast

A: Layout the Mast

Once the concrete is cured (10-14 days) you can lay out your water pipe sections starting from the tower center next to the pad - one section for the 25ft kit and two sections for the 47ft kit, plus the correct riser for your turbine. Place the couplers near their locations as well. Keep the gin pole out of the way for the time being. Do not assemble the mast at this time!

Make sure the tower base plate is securely bolted to the J-bolts embedded into the concrete. The full assembly should look similar to the picture below, but the J-bolts are now embedded into the concrete.

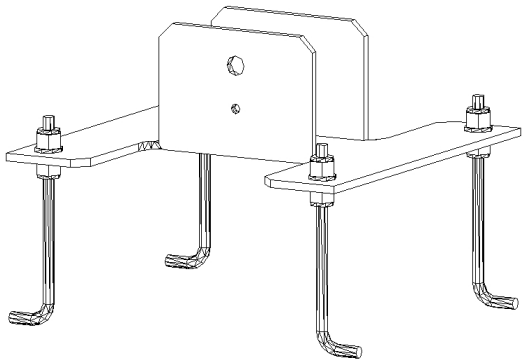

**Base Plate Connected to J-Bolts**

B: Power wire length consideration

At this point, you will need to determine the length of the DC power wires that will run from the turbine through the tower pipe down in to the ground conduit and on through the lightning kicks to the load, load control, or battery bank. Be sure to consult your turbine installation manual and system plan for these details and incorporate them in to your power wire length considerations. Don't forget the lightening kicks that will be located on the ground somewhere in the power wire run. See the chart in Appendix C on page 38 for power wire considerations or check your turbine manual for specifications.

C: Feeding the power wire through the pipe

Never assemble the pipe for your mast before you run the power wires. The easiest way to pull wire through the pipe is to use the needle and thread method. Locate a piece of re-bar approximately 4 or 5 feet in length. Use electrical or duct tape to securely and smoothly fix the power wire ends to the re-bar, allowing for a lapover of about 12 inches of re-bar taped to 12 inches of the end of the power wires. You can now easily push the wire through the riser, pipe, and couplers with out getting hung up. Be sure to pass the wire through from the top, because you will have to remove the re-bar needle to pass the wires through the swivel-T at the base. If you need to wire the mast from the bottom up be sure to thread the wires through the swivel-T first before you attach the re-bar needle.

## Step 6: Assemble the Tower Mast

Use extreme caution not to damage the power wires or their protective insulation inside of the mast components as well as the threads on the socket cap screws.

A. Tower Base

Starting with your tower base, first assemble the swivel tubing with the 7/8 bolt. The swivel bolt is assembled from left to right as it can be seen on the picture on the next page. Take the 7/8-inch bolt and slide on one of the large washers, then slide the bolt sleeve over the shaft.
With this assembly in hand, take the square tubing swivel base and assemble it to the tower base,

**Bolt and Shaft for Tilt Base**

as shown in the figure below. Take the second large washer and nut and tighten it to a 14-lbf·ft torque setting. Use a thread-compound like LockTite.

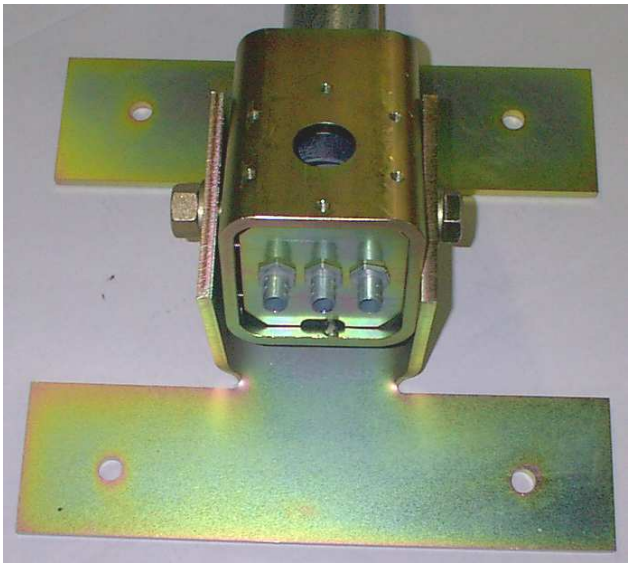

**Tilt Base showing cable adapters**

The swivel base will allow you to directly connect with ½ inch NPT either straight or flex conduit from the backside of the swivel tubing. Some Tower Kits may include the newer edition that only has one cutout for a 1½ inch flex conduit adapter for your wires.

Install the tower base compression coupler assembly on the upper surface of the square tubing swivel base using the six supplied M8 socket cap screws, as shown below. Do not forget to place the rubber dampener between the square tubing and the tower base compression coupler.

**Tilt Base with Compression Coupler Base**

Do not assemble the tower mast to the swivel base at this time. This will be done after the fore cable rigging and gin pole are connected. But do keep the six *long* socket cap screws within close reach.

B. Compression Couplers

| NOTE |
| --- |
| The compression couplers come pre-assembled for you. Be sure to observe how they fit together before you disassemble them and put them onto your pipe. Keep all parts to pre-assembled compression couplers together to reduce confusion and faulty installation. |

For the main coupler assemblies with the guy wire attach points, first assemble the coupler on one pipe as seen in the picture below. You may need a rubber mallet to initially tap the compression rings onto the tubing, or place a wood block on the rings and tap gently with a regular hammer. A screwdriver can be used as well to spread the rings at the split to fit them initially over the pipe. Make sure that the cutouts from the compression rings are 180 degrees opposed to each other. Do not use a regular hammer directly on the rings; this could destroy the chamfered surface of the compression couplers.

**Compression Coupler Assembly Showing Compression Rings**

Next bolt the compression coupler base (with the four large holes) to this assembly. Align the guy wire attach points so that they are oriented toward their respective ground anchor pad. Make sure that when you tighten the compression coupler assembly, the tubing can lie on the shoulder in the compression coupler base and that all six bolts are tightened evenly. You may check this by counting the number of threads over the edge of the compression coupler base. The torque setting for these socket head screws is 12-lbf·ft, for hex head screws it is 18-lbf·ft. Again, use a thread compound, like LockTite, to seal all threads. If you have tightened all the bolts evenly, the end cap compression ring of the assembly will be concentric to the tubing.

**End Cap of Compression Coupler**

The completed end of this pipe can now be connected to the other pipe at this joint which already also has the coupler assembly fitted on. See the illustration below. Repeat this step for the compression coupler assemblies at the rest of the joints in your tower as well.

**Fully Assembled Compression Coupler**

The wind turbine tower mast riser will assemble the same way as a regular 21-ft pipe section, as long as the outer diameter of the riser is 2 3/8 inches. If you are using a (smaller) wind turbine generator that utilizes a 1½-inch water pipe riser, you will need a reducer.

## Step 7. Cable cutting and rigging

With your tower laying on the ground, you can now cut the cable. Measurements are given below for cable length on level sites, but make sure to measure the distance as well, to double check. Please refer to the table below corresponding to your tower kit. Use a sharp cable cutter or side grinder to cut the cable to the correct lengths. Do not let the cable bind or twist. Tape the ends of the cable to prevent any unraveling.

**WARNING**

The measurements given below are only for level sites. If your site is sloped at all, refer to Appendix B on page 36. If you use the measurements below for non-level sites, the cable will not fit the site.

| 25 foot tower kit - one coupler | | |
|---|---|---|
| **# of cables** | **Length** | **Explanation** |
| 3 | 32 ft | Theoretical length of 29.7 plus 2 feet of extra |
| 1 | Remaining cable ~160 ft | Tower Tilt-Up tow loop |
| **47 foot tower kit - two couplers** | | |
| **# of cables** | **Length** | **Explanation** |
| 3 | 32 ft | Theoretical length of 29.7 plus 2 feet of extra |
| 3 | 49 ft | Theoretical length of 46.9 plus 2 feet of extra |
| 1 | Remaining cable ~ 200 ft | Tower Tilt-Up tow loop |

**CAUTION**

The 2 feet of extra on the anchor end of the guy wire allows for some slack in the cable during the test lift so as not to risk lifting the anchors out of the ground or stressing the aircraft cable due to uneven tension loads. This slack is later used to install the lightning protection loop. Always allow for this extra length.

An illustration of the 47-foot tower layout on level ground is shown below. A 25-foot tower is identical to what is shown below, except the top set of guy wires are excluded.

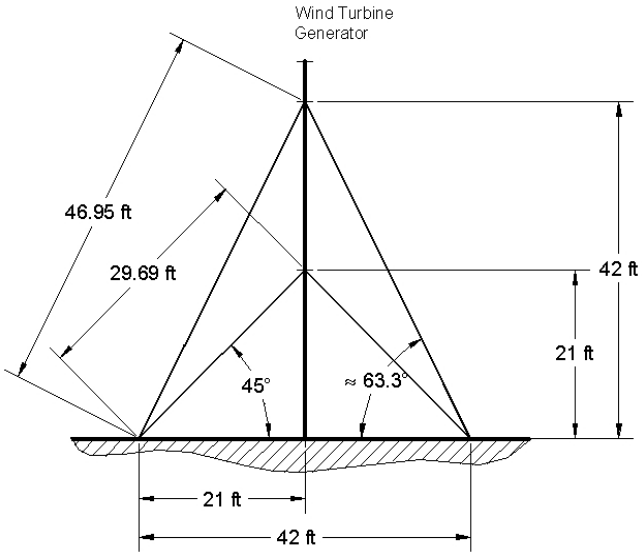


**Layout of Tower on Level Site**

**CAUTION**

A side grinder works best when cutting the cables. Using a carbide blade will dramatically improve the efficiency of the project. Make sure to wind the ends of the cable with black electric tape.

## Step 8: Rigging The Tower

Using the rigging table on page 23 or your own adjusted rigging lengths generated due to a non-level site, you can begin to rig the tower structure on the ground. Re-measure for the rigging cables before cutting them, once your mast is assembled and positioned correctly on the ground.

A: Starboard and Port Rigging

The Starboard and Port cables should be the same length and their anchors should be level with the base. Install a thimble at every future guy wire connection. Starting with the starboard rigging, assemble the (upper) mast connection first, leaving 6 inches of extra cable beyond the coupler eye hole for clamping the 3 wire rope clamps as pictured below, with at least one inch of cable beyond the last clamp. Install the 3 wire rope clamps tightly by following the convention shown in the illustration below. Be sure the loop is fitting snuggly around the thimble.

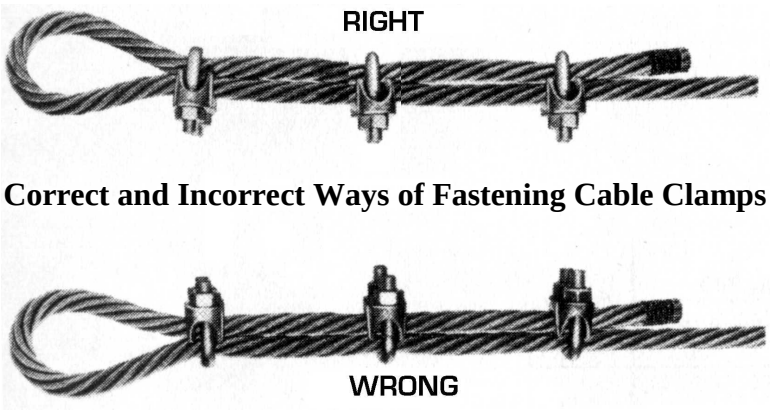


**Correct and Incorrect Ways of Fastening Cable Clamps**

| CAUTION |
| --- |
| Do not use an electric drill to tighten the wire rope clamps. The torque on the drills are too much for the cable, and makes the job much more cumbersome. Always use a cordless, battery-driven drill to tighten the wire rope clamps. |

The wire rope clamp must be mounted to the tension wire, not the short end! For the supplied aircraft cable, we recommend that you use a one-inch distance between clamps. It is imperative that you mount the first wire rope clamp directly to the thimble at the end of the guy wire.

When connecting the ground rigging to the anchor, install 3, but tighten only 2, of the wire rope clamps. If installing a 47-foot tower, follow the same procedure for the lower mast coupler. Be sure to leave 18 inches extra on each cable for slack during the test lift (erection). To ensure that you have left adequate slack, hold the cable at the midpoint when both ends of the cable are temporarily clamped, and you should be able to comfortably lift the cable up to knee level.

| CAUTION |
| --- |
| If you fail to allow for the prescribed amount of slack in the rigging, you will most probably, due to uneven tension, encounter problems plumbing the tower properly or (worst case scenario) lifting either the port or starboard anchor out of the ground during the test lift. |

Move on to the port rigging following this exact same rigging procedure.

The aft anchor will also follow in a similar procedure, but because the aft anchor is now under the tower, you will have to estimate the distance and slack in this cable. If your site is sloped, you will need to shorten the length of your aft cable. For more information on sloped sites, see Appendix B on page 34. Specifications for cables used on level ground sites are given on Page 23

B: Rigging the fore cable (the tow-line)

Use the remainder of the cable for the tow-line, also referred to as the for cable. You will not need to cut this cable to any specified size before tower erection. Follow the same cable clamp procedure as previously for the top coupler, fully tightening all three cable clamps, extend the cable fully to ensure that there are no tangles or kinks.

If you are installing a 47-foot tower, go ahead and connect the free end and install all three cable clamps to the lower mast coupler now. The anchor connections for the for guy wires will not be connected until the final erection of the tower. The remainder of the cable will be passed through the gin pole in a loop.

| NOTE |
| --- |
| If you are installing the 47-foot kit, you are creating a continuous loop that will be pushed through the slip 'T'-fitting. The slip 'T' and nipple will be eventually inserted into top end of the gin pole. |

If you are installing a 25-foot tower, no additional connections need to be made, the free end of the cable will simply pass through the gin pole assembly to hook up to the tow vehicle.

Assemble the 12-inch pipe (nipple) to the 1½-inch T-fitting provided and insert it into the gin pole. At this time you will need to tie a 70 feet long ¼ inch rope or two 35ft sections through the slip T fitting. These ropes are called valets, and are used by the ground crew during the erection to steady the gin pole from the port and starboard sides as it is tilted up. The rope will need to be tied securely at the T to allow for 35 feet of rope per side that can be held taught by the gin pole team during test lift and also later during the final erection.

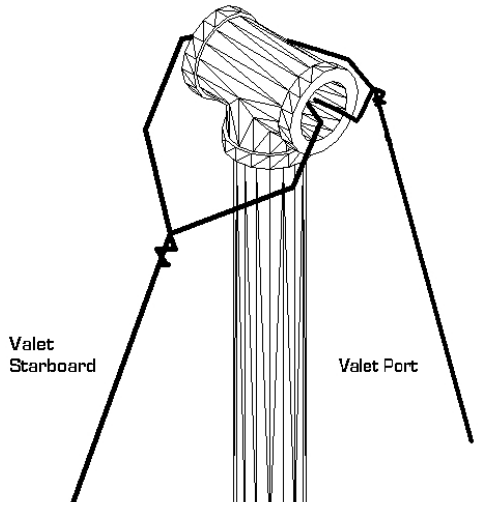


**Attaching the Valet Ropes to the Slip-T**

| NOTE |
| --- |
| It is recommended that you obtain some plastic fittings to put on either side of the Slip-T assembly. This helps reduce wear on the cable as the cable is passing through the T during the lift. While this is not necessary, it will protect the cables, and could prevent a possible cable break and tower failure. |

Pass the single cable for the 25 feet tower kit, or the loop for the 47 feet tower kit, through the gin pole slip T. There should now be two nylon ropes tied securely to the T-fitting, and another length of cable freely passing through the T-fitting.

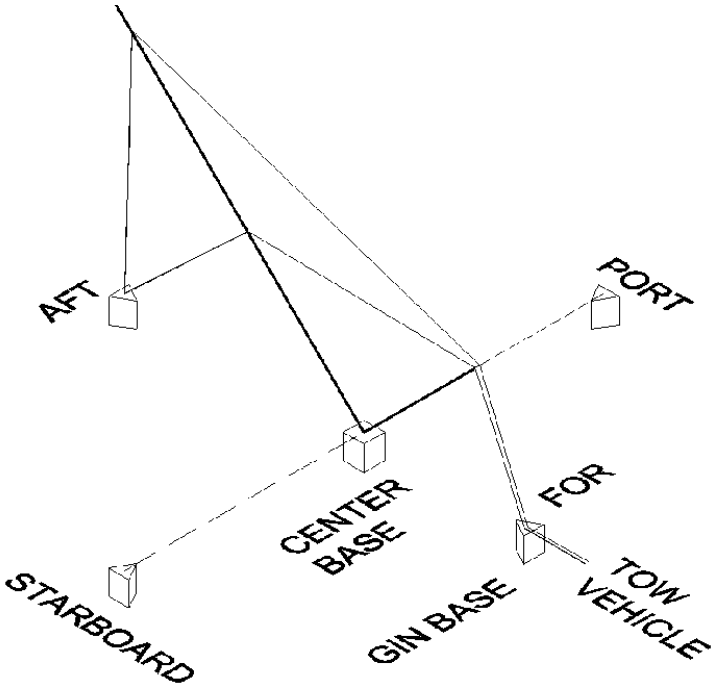


**Layout of tow-cables on tower**

Shown above is a schematic of how all the connections will be made on the 47-foot tower, prior to the test lift. The fore cable is looped twice to ensure the load will be distributed to the entire length of the cable and reduce the likelihood of material damage. The load distribution for the 47-foot tower is shown below.

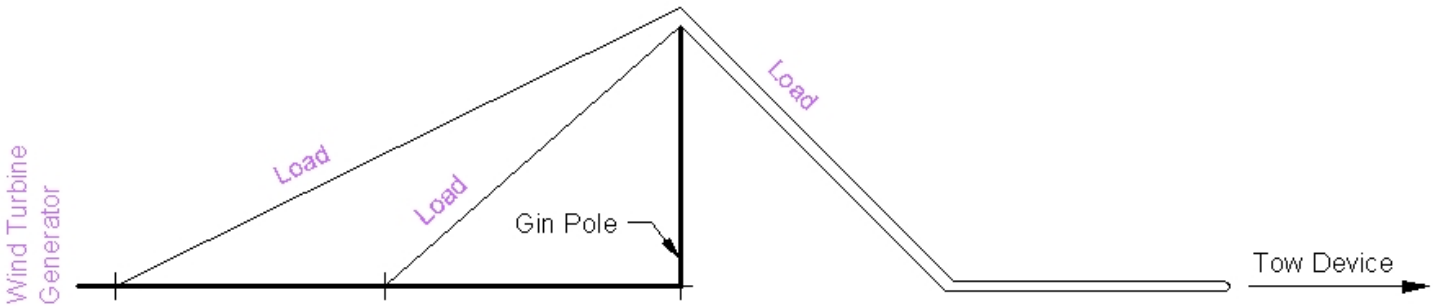


**Loads over the Gin Pole**

Now pass the end of the cable or loop end through the fore/ gin ground anchor and on toward the tow vehicle or winch. Suitable winches are available upon request. For further information please contact us at 1-888-407-WIND (9463).

C - Understanding the loads over the gin pole

Gin poles have been used for centuries to erect tall masts on ships and in more recent years for antenna and radio tower erections. The gin pole however can be easily misunderstood. The most common misconception is when it is considered to be a leverage bar.

You will need to understand that the forces applied to the gin pole are downward and not from the side. The load (weight of the tower mast) is picked up by the tow cable (mostly the upper guy wire). The load is transported to the top end of the gin pole where a downward or inward force is applied down the water pipe to the swivel-T base pivot as the cable passes through the slip-T atop the gin pole. Make sure that the slip-T (T-connector and pipe/nipple) has been inserted correctly at the top of the gin pole.

As the tower rises, more of the load is gradually transported over to the gin/fore anchor eyebolt as a "lifting force" on its way to the tow vehicle. The following figure clearly illustrates the load transport path of a tilt tower lift.

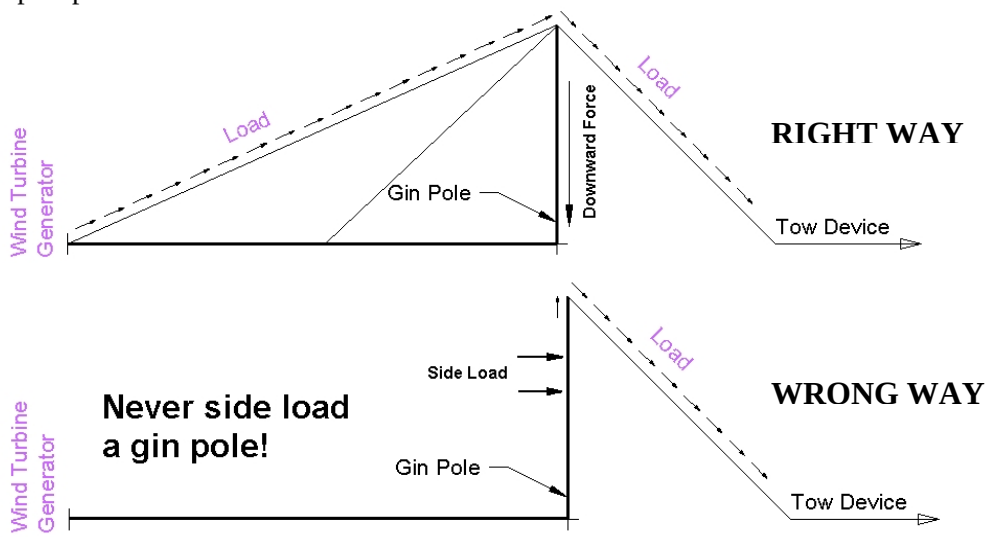


Most of the problems observed are created when an attempt is made to apply a direct force to the side of the gin pole or the tower mast. Never let anyone put any force on the gin pole or mast during an erection. People have the urge to pull up on the mast or over on the gin pole towards the ground. Applying a side load to the gin pole or mast is very dangerous because the excessive force of a leveraged side load at the tower base joints could cause an improperly threaded tower mast or gin pole to pop loose from the tower base swivel T-fitting, sending the tower crashing down!. Even if properly threaded, the swivel T-fitting is not designed for this kind of force. It is only meant to deal with downward forces applied by the tow cable over the gin.

| WARNING |
| --- |
| Never side-load a gin pole or a tower! Never apply any assisting force (pushing by hand) to the tower mast OR to the gin pole. Make sure that all erection team members understand this before any erection is attempted. If you do not understand these forces or any part of the procedure contact a qualified installer or tilt tower expert for assistance or contact AEROMAG Engineering at 1-888-407-WIND (9463). |

## Final Inspection Checklist

a) The concrete pads are cured and hardened thoroughly (10-14 days).

b) The mast base is properly positioned and safely secured.

c) The starboard, port, and base anchors are all level with one another, and the slope of the site has been taken into consideration when rigging the aft anchor.

d) The tower mast is entirely assembled *excluding* the wind turbine generator and **not yet connected** to the tower swivel base.

e) All guy wires are connected to the appropriate couplers and anchor pads (except the fore cables).

f) All wire rope clamps have been securely fastened. Mast Couplers - all 3 wire rope clamps are tightened for each of the 4 mast couplers. Anchor Pads - 2 wire rope clamps are tightened and one is loose for each of the 3 anchor pads.

g) All cables have 18 inches of slack in them for the test lift.

h) The 2- inch slip-T is set into the gin pole with the necessary "load transport loop(s)" pulled through and laying flat and unkinked along the towpath.

i) The gin pole valet safety guide ropes are attached.

j) The AC power cables inside the mast have sufficient space between the swivel-T and the base.

| CAUTION |
| --- |
| For the remainder of the tower erection, you will need at least 5 team members present. If you do not have any team members present, this is a good place to stop until they are available. When team members arrive, please brief them as shown below. |

# STOP! Have you added new team members? STOP!

## New team members briefing

- Do the new members understand the load transport system and that they can never try to lever the gin pole or lift up on the mast?

- Do the new members understand the importance of keeping the ginpole straight during the tower erection using the nylon guide ropes?

- Do the new members understand that the slack is necessary on the port and starbord riggings to ensure no overloading on the ground anchors?

- Be careful, new team members have a tendency to tighten up the slack in the port and starboard riggings. Don't let this happen.

## Step 9: Connecting the gin pole, tower base, and tow line

You are now ready to connect the gin pole, with slip-T installed and tow cables already passed through. Slide the gin pole into the pre-assembled tower base. The gin pole will fit into the two plates with circular cutouts, three inches in diameter, on the opposite side of the plate from the three small circular cutouts. Remember, the tower mast is not connected to the base at this time.

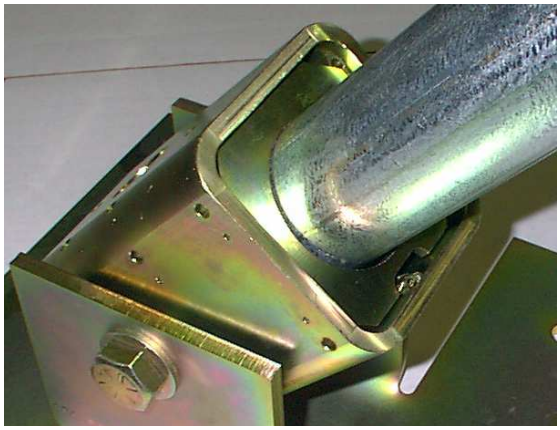

**Gin Pole Assembly**

Use the two valet ports to pivot the gin pole into the vertical position while an additional helper steadies it as well. Make sure that all the tow cables go through the center of the 2-inch T-connector, while the ropes for the valets are attached to the sidewall of the T-connector.

You can now attach your tower mast to the swivel base using the six long socket head cap screws you have set aside. This assembly goes together in exactly the same manner as the rest of the compression coupler assemblies. Take special care to ensure the mast couplers are directed in the proper direction, so the guy wires are not twisted around the tower mast. The tower mast should now be connected to the base, and the gin pole should be standing vertically into the air.
When connecting the tow wires to the tow vehicle, ensure that your connections are structurally

**Bottom of Mast - To be coupled to Tilt Base**

sound. If you are connecting a single cable (25 ft tower), be sure to use cable clamps to make a loop for the tow ball or winch. Now place the single end loop or continuous cable loop onto the tow ball on tow vehicle or winch. Before tilting up your (47 ft) tower you want to make sure that the continuous tow loop on the tow device is pulled tight to remove any slack then clamped so it can not slide, thus allowing simultaneous and unhindered loading on both couplers!

## Step 10: The test lift

Make sure you have adequate number of team members present. There should be one person at each of the anchors, monitoring the stability of the anchor and the behavior of the guy wire. One person should be free to observe the mast integrity and straightness in the initial stages and especially the behavior of the aft guy wires near the end of the lift. This member will also listen to input from the others and be the only one to command the tow/winch operator directly. When all is in readiness begin the lift slowly and smoothly until the gin pole tilts onto the ground and the mast is vertical.

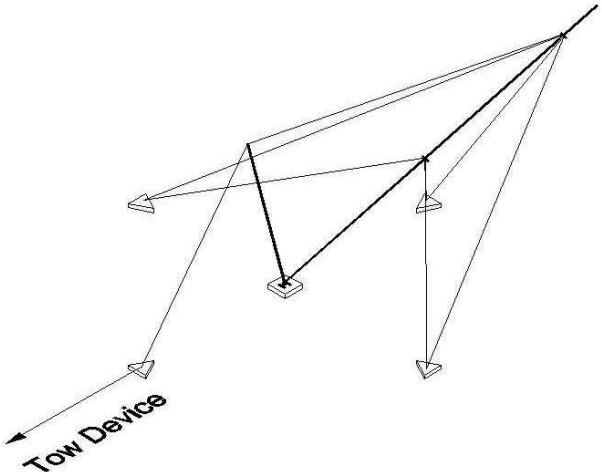


**Lift Schematic**

Make sure the tower mast is completely vertical to minimize stress concentrations on the couplers and anchor and base pad mounts. Use a long contractors level to check for this with lowest section (and sight the upper) for straightness.

Hand tighten (or loosen) guy wires one by one at the anchor connections to bring tower sections into vertical straightness until all wires are in satisfactory tension, reducing all the slack within the wires. Fasten all the wire rope clamps tightly. When this is done, the tower can be let slowly back down again for mounting the turbine.

**Test-lifting the Tower**

## Step 11: Installing the wind turbine

To install your wind generator, you must attach a mast riser to the top of the tower when the tower is laying fully on the ground. The wind turbine sits on top of this riser according to your specific wind turbine generator manual. If you have not received a wind turbine generator manual and/or specifications for your riser, contact your wind turbine manufacturer or call Aeromax at 1-888-407-WIND (9463).

| CAUTION |
| --- |
| While you are installing the turbine and power components, make sure the gin pole is either removed or fully secured. If left unattended, the gin pole could start falling sideways, and may seriously damage the mast base. |

After the turbine and mast riser are properly attached, connect your power cables to your load or battery bank immediately. Do not turn the blades or operate the turbine without an electrical load. If you are having a problem connecting to the load quickly, short the power wires temporarily by connecting them together in order to slow or stop the turbine.

When all is in readiness, proceed with the final erection in the same manner as the test lift. Use extreme caution, because your expensive wind generator is now installed on top of the tower.

The towline must now be carefully disconnected from the tow vehicle or the winch. Keeping plenty of tension on the cable, bring it back to the for anchor. Attach the thimbles between the anchor and the cable. Attach and tighten the wire clamps in the same manner as the other guy wires.

| WARNING |
| --- |
| DO NOT CUT THE TOW CABLE. The full length of wire will be needed in the future for tower lowering and lifting. The cable can be coiled up at the base of the for anchor or strapped to the guy wire. |

The Slip T does not need to be removed from the anchor pad base after the tower and turbine has been installed. The picture below shows the Slip-T sitting on the anchor. You can keep the entire gin pole attached to the tower base, or remove the 21 foot section of pipe to leave the slip T in the figure as shown.

**Slip T left on the Tow Anchor**

# Congratulations!!

## You have successfully installed an

## AEROMAG Load Transport Tilt-Up Tower!

# Appendix A - Severe or Turbulent Wind Sites

If you are in an extreme high wind site, you will need to abandon the foam forms included and utilize the sono tube method. Sono tubes should be 12 inches in diameter, 4 feet long and set completely into the ground. The cardboard sono tubes should be available at your local building supply. A sono tube is always a great idea for the fore (tow) anchor which experiences the highest loads when tilting-up your tower.

In addition to Sono Tubes, you may want to consider purchasing an AEROMAG Ice Tower kit. These Ice Tower kits include an additional Guy Wire Connection Collar that fits on the midsection of each length of pipe and additional lengths of aerospace grade cable. These Connection Collars enable you to connect more guy wires to your tower, enabling you to provide more structural support in high wind sites. Adding additional guy wires will require that you calculate the new cable lengths, and pass additional loops through the Slip-T assembly to the Tow Vehicle.

For more information about Ice Tower kits, contact AEROMAG at 1-888-407-WIND (9463).

# Appendix B - Sloped Sites

## A. Calculating the slope of your site

Severely uneven sites require offset aft and for (towline) anchor locations and cable rigging. On a sloped site, the towline should be facing downhill, so the starboard and Port anchors should be level with one another. Therefore, the aft anchor will be facing uphill.

| WARNING |
| --- |
| It is very important that the port and the starboard anchors are level with each other, as well as the base pad. If these anchors are not close to level, you will have difficulty rigging the tower and cutting the cable lengths. During the lift and tower lowering, undue stresses will be applied to the tower and cables, increasing the possibility of tower failure. If these three anchors are not all level with one another, you will need to re-adjust the cable lengths every time you lift or lower your tower. |

The best way to ensure the starboard, port and base anchors are level is to use a laser level or a homemade leveling device. Laser levels are fairly inexpensive (about $20) and will make the job much easier. When you excavate the holes and pour the anchor pads, take measurements with the laser level to ensure the anchors are level. If necessary, you may need to raise the form of the anchor pad or recess them into the ground. The drawings below illustrate this method.

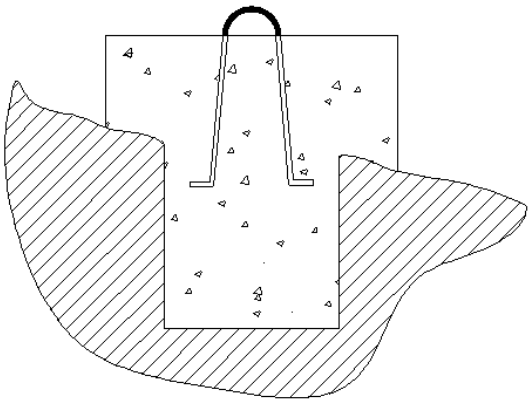

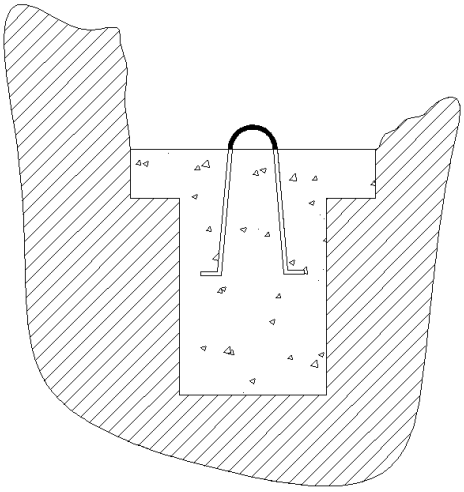

Alternative anchors can also be used. Towers have been installed by planting a length of pipe vertically in adequate concrete and installing an anchor on top of the pipe in order to compensate for the drop in site elevation. If these types of measures are not taken, you will stress your tower on lowering, stress the tilt base, and possibly miss your lowering mark when you lower your turbine for service. It is extremely important that you pay attention to the slope of your site and ensure the port and starboard anchors are level with each other.

In order to develop a comprehensive plan for an uneven site, measurements of the slope must be taken. You will need to have a basic understanding of surveying and geometry or get help in order to do this. The layout can be reconstructed on graph paper in order to establish accurate anchor locations.

If you do not have access to survey equipment like a transit or level and a survey measurement stick, you can make your own sight level using a piece of ¼" tubing taped to the back of a torpedo or line level. A long stick (5 feet) can be used as the measuring stick for surveying purposes.

Mount your surveying equipment to a flat level surface as close to the ground as possible. A helper should be standing at the proposed anchor site, and the horizontal distance between the level and the helper should be recorded in the table below as "D". Your helper will be holding the measuring stick at the anchor site, and will mark the stick at the level indicated through the site tube. The distance between the bottom of the stick and the mark should be measured and recorded in the table below as "S".

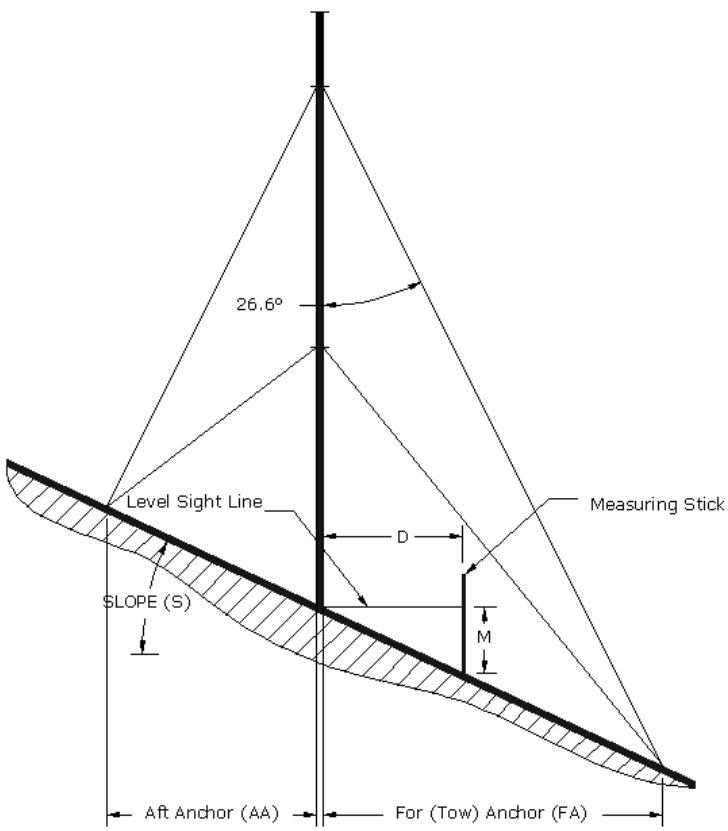


| "M" Measurement of Stick from bottom to mark | "D" Horizontal Distance from level to stick |
|---|---|
| | |

The slope of the site (in degrees) can be calculated using the following formula

$$Slope = \tan^{-1}\left(\frac{M}{D}\right)$$

Now that you know the slope of your site, the exact location of the anchors and the required cable lengths can be calculated and entered in the table on the next page.

## B. Calculating anchor locations and cable Lengths for Sloped Sites

The For (Tow) Anchor (FA) and Aft anchor (AA) lengths are calculated using these equations:

$$FA = \frac{18.75 \times \cos(S)}{\sin(63 - S)} \qquad AA = \frac{18.75 \times \cos(S)}{\sin(117 - S)}$$

Please enter these values and the Slope into the table below.

| "S" Slope | "FA" For (Tow) Anchor | "AA" Aft Anchor |
|---|---|---|
| | | |

| NOTE |
|---|
| For your convenience, a table has been included on the next page with cable lengths and anchor locations for your given slope. |

Using the slope measurements and anchor calculations from above, you can now calculate the amount of cable needed for your site. You will only need to cut cable for the Aft Anchor, because the Tow line will be made from the remainder of the cable. The starboard and port cable lengths can be found on page 23, given that the two anchors are level with one another.

| WARNING |
|---|
| The original angle of 26.6 degrees for the upper guy wires for a 47 foot tower on a level site must be maintained for a sloping site as well. The lower guy wire angles will of necessity be different. It is the upper wires that bear most of the loads that makes the angle critical. |

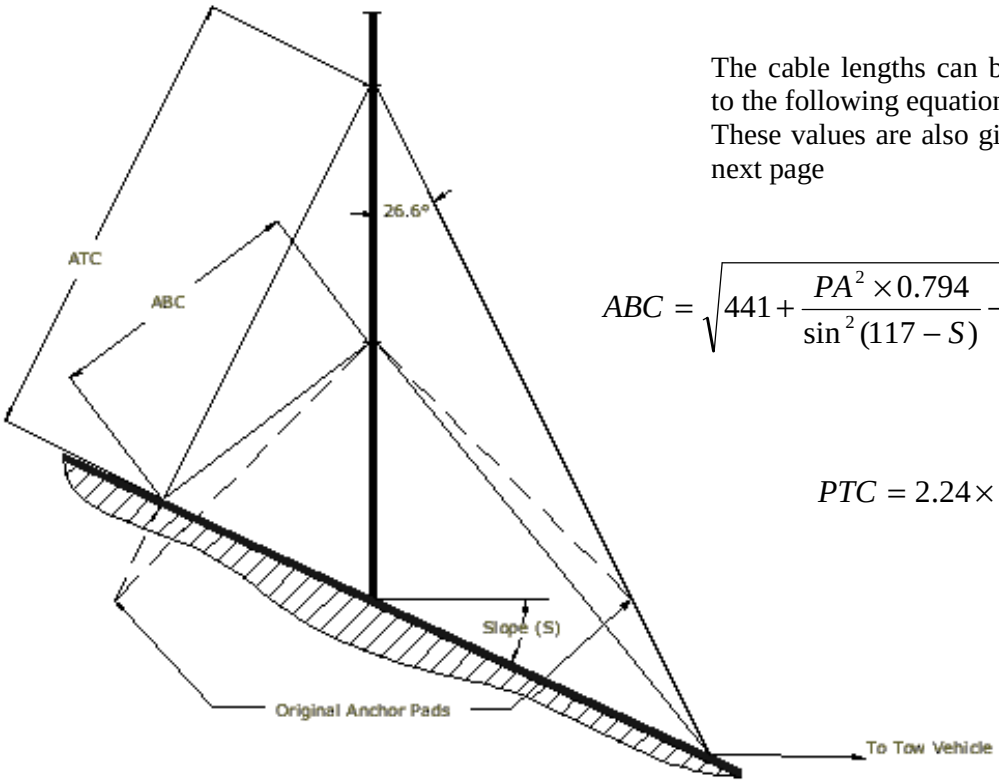


The cable lengths can be calculated according to the following equations:
These values are also given in the table on the next page

$$ABC = \sqrt{441 + \frac{PA^2 \times 0.794}{\sin^2(117 - S)} - 37.4 \times \frac{PA \times \cos(90 - S)}{\sin(117 - S)}}$$

$$PTC = 2.24 \times PA$$

| Cable lengths and Anchor Positions for sloped tower sites | | | | | | | | | | |
|---|---|---|---|---|---|---|---|---|---|---|
| | 47 Foot Tower | | | | | | 25 Foot Tower | | | |
| Slope | Starboard Anchor | Port Anchor | Upper Starboard Cable | Lower Starboard Cable | Upper Port Cable | Lower Port Cable | Starboard Anchor | Port Anchor | Starboard Cable | Port Cable |
| 0 | 21.00 | 21.00 | 46.96 | 29.70 | 46.96 | 29.70 | 21.00 | 21.00 | 46.96 | 46.96 |
| 2 | 21.37 | 20.64 | 47.79 | 30.49 | 46.15 | 28.93 | 21.76 | 20.29 | 48.66 | 45.37 |
| 4 | 21.76 | 20.29 | 48.66 | 31.32 | 45.37 | 28.19 | 22.58 | 19.63 | 50.49 | 43.89 |
| 6 | 22.16 | 19.95 | 49.56 | 32.18 | 44.61 | 27.48 | 23.47 | 19.00 | 52.47 | 42.49 |
| 8 | 22.59 | 19.62 | 50.51 | 33.08 | 43.87 | 26.78 | 24.43 | 18.41 | 54.64 | 41.17 |
| 10 | 23.03 | 19.30 | 51.50 | 34.04 | 43.15 | 26.10 | 25.50 | 17.85 | 57.01 | 39.92 |
| 12 | 23.50 | 18.98 | 52.54 | 35.04 | 42.45 | 25.44 | 26.67 | 17.32 | 59.63 | 38.73 |
| 14 | 23.99 | 18.67 | 53.64 | 36.10 | 41.75 | 24.80 | 27.97 | 16.81 | 62.55 | 37.59 |
| 16 | 24.51 | 18.37 | 54.82 | 37.24 | 41.07 | 24.17 | 29.44 | 16.32 | 65.84 | 36.49 |
| 18 | 25.07 | 18.07 | 56.07 | 38.45 | 40.39 | 23.54 | 31.11 | 15.85 | 69.56 | 35.44 |
| 20 | 25.67 | 17.77 | 57.40 | 39.75 | 39.73 | 22.93 | 33.02 | 15.40 | 73.83 | 34.43 |
| 22 | 26.32 | 17.47 | 58.84 | 41.15 | 39.07 | 22.33 | 35.24 | 14.96 | 78.79 | 33.44 |
| 24 | 27.01 | 17.18 | 60.40 | 42.67 | 38.41 | 21.73 | 37.85 | 14.53 | 84.64 | 32.49 |
| 26 | 27.77 | 16.88 | 62.10 | 44.33 | 37.75 | 21.14 | 40.99 | 14.12 | 91.67 | 31.56 |
| 28 | 28.60 | 16.59 | 63.96 | 46.14 | 37.10 | 20.55 | 44.84 | 13.71 | 100.27 | 30.66 |
| 30 | 29.52 | 16.30 | 66.01 | 48.16 | 36.44 | 19.97 | 49.69 | 13.31 | 111.10 | 29.77 |
| 32 | 30.54 | 16.00 | 68.30 | 50.39 | 35.78 | 19.39 | 55.98 | 12.92 | 125.18 | 28.90 |
| 34 | 31.69 | 15.70 | 70.85 | 52.91 | 35.11 | 18.81 | 64.52 | 12.54 | 144.27 | 28.04 |
| 36 | 32.98 | 15.40 | 73.75 | 55.76 | 34.44 | 18.23 | 76.79 | 12.16 | 171.72 | 27.20 |
| 38 | 34.46 | 15.10 | 77.06 | 59.03 | 33.77 | 17.65 | 96.02 | 11.79 | 214.70 | 26.36 |
| 40 | 36.18 | 14.79 | 80.90 | 62.82 | 33.08 | 17.07 | 130.52 | 11.42 | 291.84 | 25.53 |

Example: 25 degree sloped site and 47 foot tower. The aft (uphill) upper cable would measure only approximately 38.07 feet, while the tow (downhill) upper cable length would measure 61.35 feet. This is significant, considering the original upper cables measurement of 46.95 feet. The port anchor will also be closer to the mast pad than the starboard anchor is.

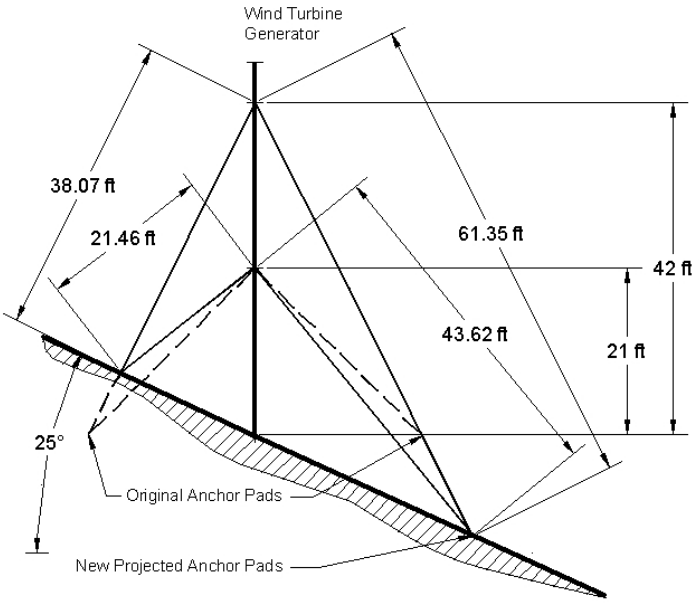

# Appendix C - Maximum Ampacities of Conductors

| Size | Temperature Rating of Conductor | | |
|---|---|---|---|
| AWG or kcmil | 60 °C | 75°C | 90°C |
| | Types: TW, UF | Types: FEPW, RH, RHW, THHW, THW, THWN, XHHW, USE, ZW | Types: TBS, SA, SIS, FEP, FEPB, MI, RHH, RHW-2, THHN, THHW, THW-2, THWN-2, USE-2, XHH, XHHW, XHHW-2, ZW-2 |
| | **Copper Conductors** | | |
| 18 | - | - | 14 |
| 16 | - | - | 18 |
| 14 | 20 | 20 | 25 |
| 12 | 25 | 25 | 30 |
| 10 | 30 | 35 | 40 |
| 8 | 40 | 50 | 55 |
| 6 | 55 | 65 | 75 |
| 4 | 70 | 85 | 95 |
| 3 | 85 | 100 | 110 |
| 2 | 95 | 115 | 130 |
| 1 | 110 | 130 | 150 |
| 1/0 | 125 | 150 | 170 |
| 2/0 | 145 | 175 | 195 |
| 3/0 | 165 | 200 | 225 |
| 4/0 | 195 | 230 | 260 |

**Line Losses for OB1kW Wind Turbine Generator Users**

| Distance up to (Including tower height) | Recommended wire size | Approximate line loss |
|---|---|---|
| 100 ft | # 6 Multi-stranded | 2.00% per phase |
| 200 ft | # 4 Multi-stranded | 2.55% per phase |
| 400 ft | # 1 Multi-stranded | 2.54% per phase |

Please consult your Wind Turbine Manual for further information.