NOTES: UNLESS OTHERWISE SPECIFIED

1. SEE DRAWING NO. CB-00311 AND PROCEDURE P-1000 FOR ASSEMBLY AND TEST INSTRUCTION. PROCEDURES AND ASSEMBLY DRAWINGS ARE FOR INTERNAL USE ONLY.
2. ALL TESTING ARE IAW BATTERY COUNCIL INTERNATIONAL STANDARDS.
3. ALL DIMENSIONS ARE IN INCHES [MM].
4. ABBREVIATION USED IN TITLE IS: SEALED LEAD ACID (SLA).

REVISIONS			
REV	DESCRIPTION	DATE	APPROVED

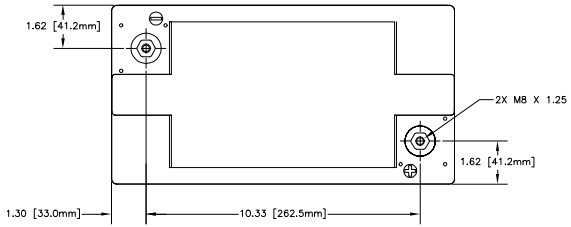

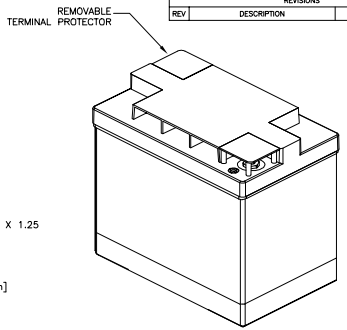

REFERENCE VIEW

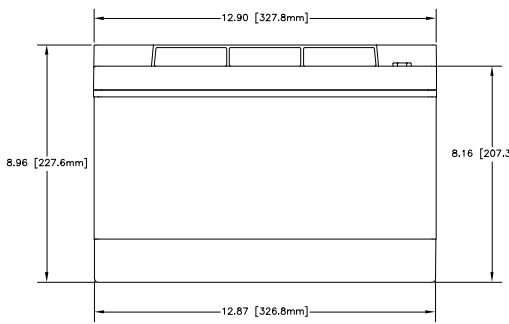

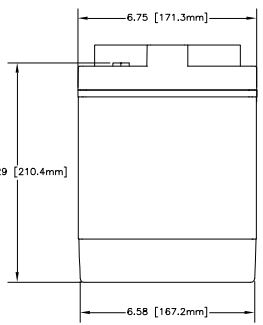

CAPACITY RATE		
PART NUMBER	PVX-1780T	PVX-2160T
NOMINAL WEIGHT	62 LBS [28.2 KG]	70 LBS [31.8 KG]
AMPERE HOUR CAPACITY @ 24 HOUR 1.75 VOLTS/CELL @ 77°F (25°C)	178 AH	216 AH

ENVELOPE DRAWING

QTY REQD	CAGE CODE	PART OR IDENTIFYING NO.	NOMENCLATURE OR DESCRIPTION	MATERIAL SPECIFICATION	ITEM NO.

PARTS LIST

UNLESS OTHERWISE SPECIFIED DIMENSIONS ARE IN INCHES TOLERANCES ARE:
FRACTIONS ± 1/32 DECIMALS .XX ± .010 .XXX ± .030 ANGLES ± 1°

CONTRACT NO. NA

APPROVALS		DATE
DRAWN	ELH	8/13/01
CHECKED	HRF	8/21/01
APPROVED	JBT	8/23/01
ISSUED	AT	8/24/01

TITLE CONCORDE BATTERY CORPORATION
2009 SAN BERNARDINO RD., W. COVINA, CA 91790
BATTERY, SLA, 6 VOLT, PVX-2160T SERIES

TREATMENT NONE
FINISH NONE
SIMILAR TO NA ASY WT NA DALE W NA

SIZE C CAGE CODE 63017 DWG NO. PVX-2160T REV
SCALE NONE SHEET 1 OF 1

ENGINEERING COPY 24AUG01